178 084 35-5 2017-10-23

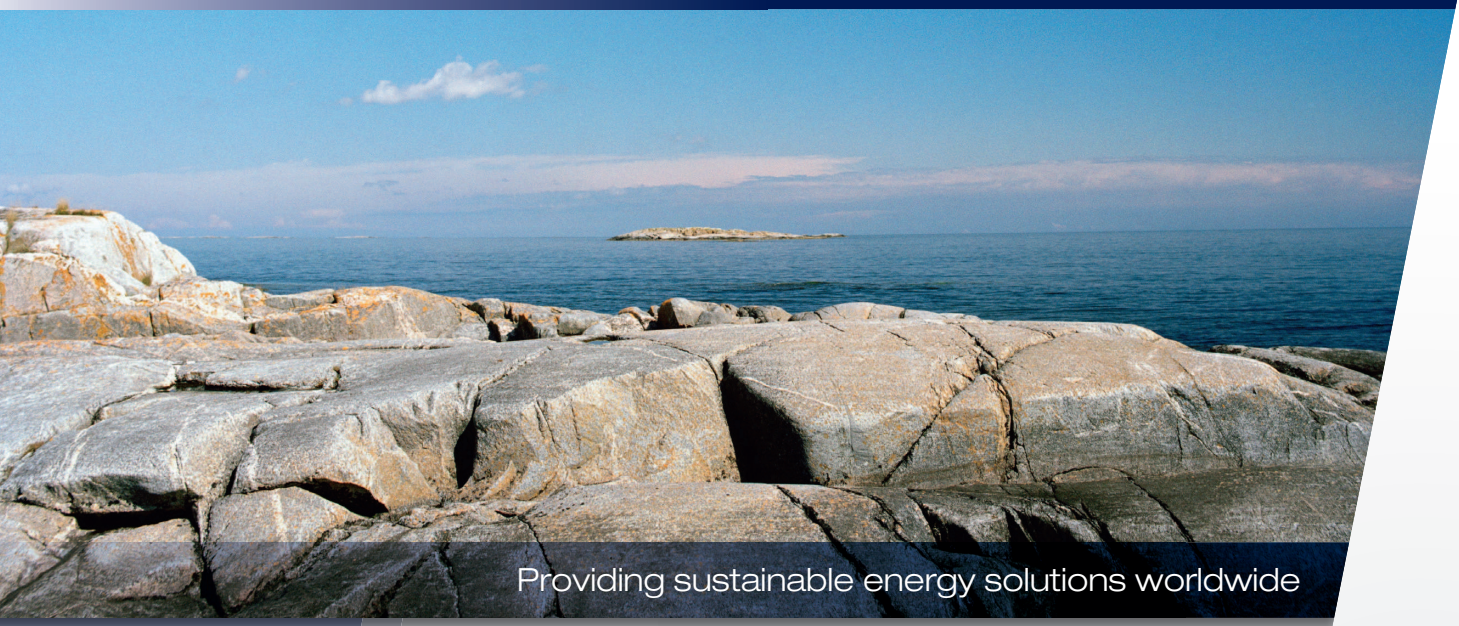

Installation- and maintenance instruction

BF1

2-stage

Bentone®
Enertech Group

Table of contents

GENERAL
- Important to think about! 4
- Safety instructions 4
- Warnings 4
- Electrical safety 5
- Assembly and Service 5
- Condensation in the flue 5
- Measures to increase the temperature 5
- Adjusting the burner 5

1. TECHNICAL DATA 6
- 1.1 Dimensions BF1 6
  - 1.1.1 Dimensions, flanges 6
- 1.2 Model BF1-2 K/KV 76-26 7
  - 1.2.1 Burner output/ Basic settings 7
- 1.3 Recommended nozzles and pressures 8
- 1.4 Nozzle table, 8-24 bar 8
  - 1.3.1 Burner with preheater 8
- 1.5 Description 10
  - 1.5.1 Components 11

2. INSTALLATION 12
- 2.1 Delivery checks 12
- 2.2 Preparations for installation 12
- 2.3 Oil supply 12
- 2.4 Electrical connection 12
- 2.5 Choice of nozzle 12
- 2.6 Brake plate and airflow setting 12
- 2.7 Burner installation 13
  - 2.7.1 Hole pattern 13
  - 2.7.2 Burner installation 13
  - 2.7.3 Oil pipes 13
  - 2.7.4 Electrical connection 13

3. BASIC SETTINGS 14
- 3.1 Example of basic setting for two-stage burners 14
  - 3.1.1 Choice of nozzle 14
  - 3.1.2 Basic settings 14
  - 3.1.3 Nozzle assembly adjustment 15
  - 3.1.4 Air intake adjustment 15
  - 3.1.5 Procedure for setting the amount of air 15
  - 3.1.6 Inlet cone, air adjustment 15
  - 3.1.7 Rotation of the air intake 16
  - 3.1.8 Air duct 16

4. BURNER SERVICING 17
- 4.1 Warning 17
  - 4.1.1 Service position 17
    - 4.1.1.1 Service position 1 17
    - 4.1.1.2 Service position 2 17
    - 4.1.1.3 Service position 3 18
  - 4.1.2 Combustion assembly service 18
  - 4.1.3 Preheater replacement 19
  - 4.1.4 Oil pump replacement 19
  - 4.1.5 Fan motor replacement 20
  - 4.1.6 Air intake and intake cone service 21
  - 4.1.7 Fan wheel checks 21
    - 4.1.7.1 Inspection 21
    - 4.1.7.2 Cleaning, alternative 1 22
    - 4.1.7.3 Cleaning, alternative 2 23
  - 4.1.8 Electrical module 23
    - 4.1.8.1 Replacement of complete electrical package 24
    - 4.1.8.2 Replacement of individual electrical components 24
    - 4.1.8.3 Replacing the damper motor 25

5. PUMP INSTRUCTIONS 26
- 5.1 Suntec AT2 45C 26
  - 5.1.1 Technical data 26
  - 5.1.2 Components 26
  - 5.1.3 Function AT2 45C 27
  - 5.1.4 Suction pipe tables AT2 45C 28
    - 5.1.4.1 Overhead Tank 28
    - 5.1.4.2 Underlying Tank 28
- 5.2 Danfoss BFP 52E 29
  - 5.2.1 Technical data 29
  - 5.2.2 Components 29
  - 5.2.3 Function BFP 52E 30
  - 5.2.4 Suction pipe tables BFP 52E 31
    - 5.2.4.1 Overhead Tank 31
    - 5.2.4.2 Underlying Tank 31
    - 5.2.4.3 Purging 31

6. PREHEATER 32
  - 6.2.1 Function FPHB 5 32
  - 6.2.2 Function FPHB 5-LE 32
    - 6.2.2.1 LE-valve 32

7. ELECTRICAL EQUIPMENT LMO24../LMO44.. 33
- 7.1 Wiring diagram 2-stage 33
  - 7.1.1 Component list 34
  - 7.1.2 Function LMO24../LMO44.. 34
  - 7.1.3 Technical data 35
  - 7.1.4 Colour codes LMO14/24 36
  - 7.1.5 Fault codes LMO14/24 36

8. FAULT LOCATION 37
- 8.1 Burner will not start 37
- 8.2 Burner will not start after normal use 37
- 8.3 Delayed ignition, burner starts; pulsation 37

9. DECLARATION OF CONFORMITY 38

10. OIL BURNERS MAINTENANCE INSTRUCTIONS 39

Important to think about!

Read this manual

- This manual should be followed by anyone who for any reason performs work on the installation or its component parts.
- The manual is especially intended for authorized personnel.
- The manual is to be considered as part of the burner and must always be kept in the vicinity of the installation site.
- Enertech recommends that the burner be shut down when the oil tank is filled, and for six hours thereafter, to reduce the risk of blockages.

Safety instructions

The electrical installation must be carried out according to the high voltage provisions and be performed in a professional manner, so that the risk of oil leakage, fire or personal injury is avoided

Warnings

- The manual must be read before installation and start-up.
- This manual should be followed by anyone who for any reason performs work on the installation or its component parts.
- The manual is to be considered as part of the burner and must always be kept in the vicinity of the installation site.
- Ensure that the fresh air inlet to the room where the burner is located is always open.
- The burner may only be installed by authorized personnel.
- Check that the burner is suitable for the boiler type.
- The burner must be installed in accordance with local legislation regarding electrical safety and fuel supply.
- The burner is designed for oil viscosities ranged between 1.2 and 8.0 cSt at 20°C.
- The burner must be protected by at most a 10 A fast-blow or 6.3 A slow-blow fuse.
- No burner safety system may be disconnected.
- The installation engineer must ensure that the boiler room is supplied with sufficient fresh air in accordance with local standards.
- Cut the power and shut-off the fuel supply before performing service.
- Enertech recommends that the burner be shut down when the oil tank is filled, and for six hours thereafter, to reduce the risk of blockages.
- The external temperature of the burner's component parts may exceed 60°C.
- Ensure that the burner is protected from water spills, as its design will not withstand such.
- Oil filters should be used.
- Only use spare parts recommended by Enertech.

Electrical safety

- If any electrical connections are made other than those recommended by Enertech, there is a risk of personal injury and equipment damage.
- The electrical installation must be carried out according to the high voltage provisions and be performed in a professional manner, so that the risk of oil leakage, fire or personal injury is avoided.
- The installation engineer must be especially careful to ensure that no electrical wiring or oil lines are pinched or damaged during installation or service

Assembly and Service

- If the boiler is equipped with an inspection hatch, the hatch should be fitted with an interlock.
- Filters must be fitted to the oil supply line.
- Shut-off cocks must be fitted to the oil supply line.
- Oil lines must adhere to the current national standards of each respective country.

Condensation in the flue

A modern burner works with lower surplus air and also often with smaller nozzles than older types. This raises efficiency but also increases the risk of condensation in the flue. The risk increases if the cross section of the flue channel is too great. Flue gas temperatures should be above 60°C measured 0.5 m from the flue chimney.

If the burner is used together with a condensing boiler, working condensing, the installation must have a chimney that manages this type of operating conditions.

Measures to increase the temperature

- Insulate the flue in cold loft space.
- Install an insert flue.
- Install a Dragex draught stabilizer or equivalent (which dries and entilates the flue during shutdown periods).

Adjusting the burner

In order to achieve correct adjustment flue gas analysis and temperature measurements must be carried out. Otherwise there is a risk of soot build-up, poor efficiency or condensate precipitation in the flue..

1. TECHNICAL DATA

1.1 Dimensions BF1

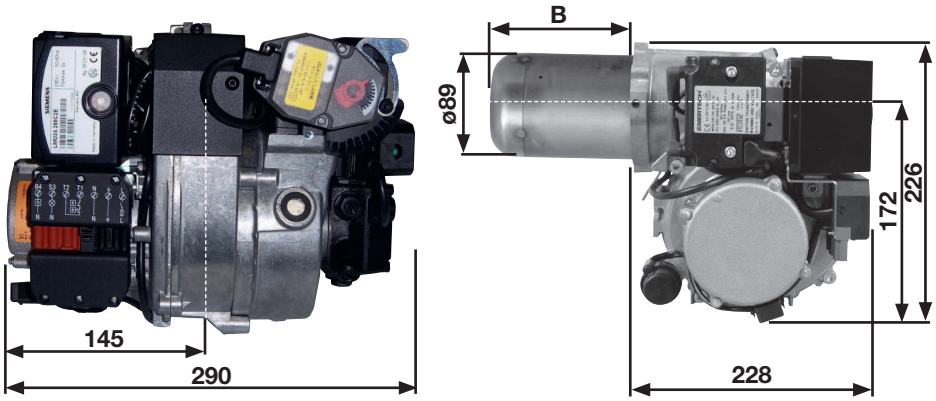

1.1.1 Dimensions, flanges

Flange 1

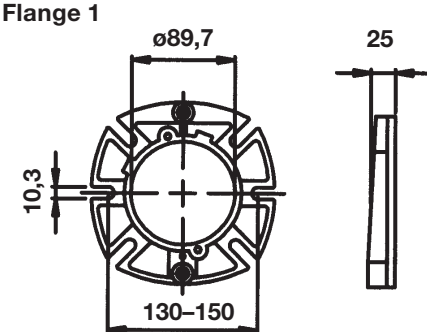

Flange 2

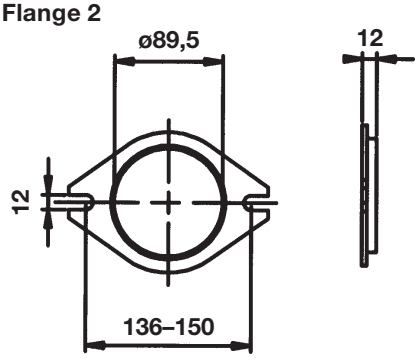

Flange 3

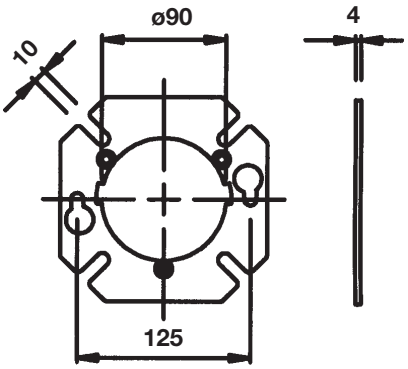

Flange 4

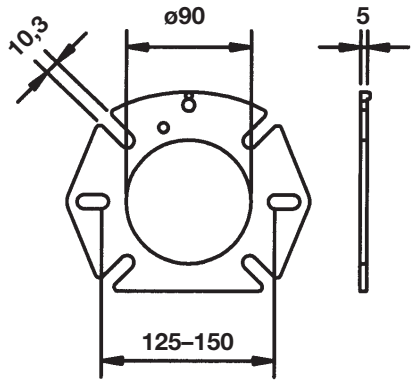

1.2 Model BF1-2 K/KV 76-26

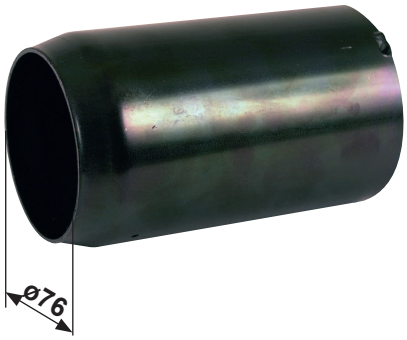

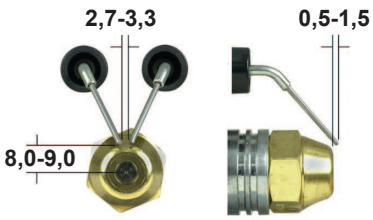

Length of blast tube	Protrusion from flange, measurement B			
	Flange			
	1	2	3	4
117	82	95	103	102
147	112	125	133	132
197	162	175	183	182

1.2.1 Burner output/ Basic settings

3,8 - 8,4 kg/h
45 - 100 kW

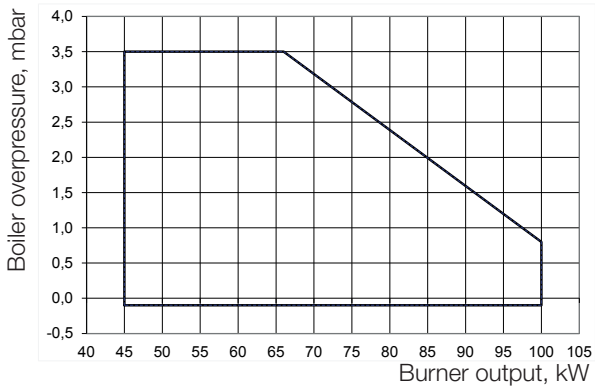

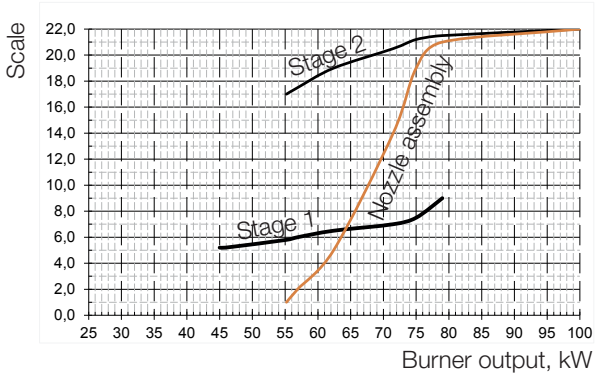

! Scale value applies to 0 mbar furnace pressure.

1.3 Recommended nozzles and pressures

Because of the different types of boiler in existence, with varying furnace geometries and furnace loads, it is not possible to commit to any given spray angle or spay pattern. Note that spray angles and spray patterns change with pump pressures.

Nozzle	60° Solid/Hollow cone		
	80° Solid/Hollow cone		
Pump pressure: Fuel oil 1		8 - 24 bar	
	1-stage	10 bar	(8 - 12 bar)
	2-stage	20 bar	(15 - 24 bar)
Pump pressure: Kerosene		8 - 12 bar	
	1-stage	9 bar	(8 - 10 bar)
	2-stage	11 bar	(10 - 12 bar)

1.4 Nozzle table, 8-24 bar

Pump pressure, bar

Gph	8		10		12		14		16		18		20		22		23		24	
	kg/h	kW	kg/h	kW	kg/h	kW	kg/h	kW	kg/h	kW	kg/h	kW	kg/h	kW	kg/h	kW	kg/h	kW	kg/h	kW
0,40	1,33	16	1,49	18	1,63	19	1,76	21	1,85	22	1,96	23	2,06	25	2,17	26	2,21	27	2,26	27
0,50	1,66	20	1,86	22	2,04	24	2,20	26	2,37	28	2,51	30	2,64	31	2,77	33	2,84	34	2,90	34
0,60	2,00	24	2,23	26	2,45	29	2,64	31	3,00	36	3,18	38	3,35	40	3,52	42	3,59	43	3,67	44
0,65	2,16	26	2,42	29	2,65	31	2,86	34	3,38	40	3,58	43	3,78	45	3,96	47	4,05	48	4,14	49
0,75	2,49	29	2,79	33	3,08	36	3,30	39	3,72	44	3,94	47	4,16	49	4,36	52	4,46	53	4,55	54
0,85	2,83	33	3,16	37	3,47	41	3,74	44	4,19	50	4,44	53	4,68	56	4,91	58	5,02	59	5,13	61
1,00	3,33	39	3,72	44	4,08	48	4,40	52	4,71	56	4,99	59	5,26	62	5,52	65	5,64	67	5,76	68
1,10	3,66	43	4,09	48	4,48	53	4,84	57	5,36	64	5,69	67	6,00	71	6,29	75	6,43	76	6,57	78
1,20	3,99	47	4,47	53	4,89	58	5,29	63	5,63	67	5,97	71	6,29	75	6,60	78	6,75	80	6,89	82
1,25	4,16	49	4,65	55	5,10	60	5,51	65	5,96	71	6,32	75	6,66	79	6,99	83	7,14	85	7,30	86
1,35	4,49	53	5,02	59	5,50	65	5,95	70	6,54	78	6,94	82	7,31	87	7,67	91	7,84	93	8,01	95
1,50	4,98	59	5,58	66	6,11	72	6,60	78	7,39	88	7,84	93	8,26	98	8,66	103	8,86	105	9,05	107
1,65	5,49	65	6,14	73	6,73	80	7,27	86	7,69	91	8,16	97	8,60	102	9,02	107	9,22	109	9,42	112
1,75	5,82	69	6,51	77	7,14	85	7,71	91	8,29	98	8,79	104	9,26	110	9,72	115	9,93	118	10,15	120
2,00	6,65	79	7,45	88	8,18	97	8,81	104	9,39	111	9,95	118	10,49	124	11,01	131	11,25	133	11,50	136
2,25	7,49	89	8,38	99	9,18	109	9,91	117	10,56	125	11,20	133	11,81	140	12,39	147	12,66	150	12,94	153

The table applies to oils with a viscosity of 4.4 mm^2/s (cSt) at a density of 830 kg/m^3.

1.3.1 Burner with preheater

Allow for a reduction in oil quantity of 5–20% with preheating owing to:

- Temperature increases at the nozzle.
- Nozzle design.
- Capacity (the higher the capacity the lower the difference).

1.5 Description

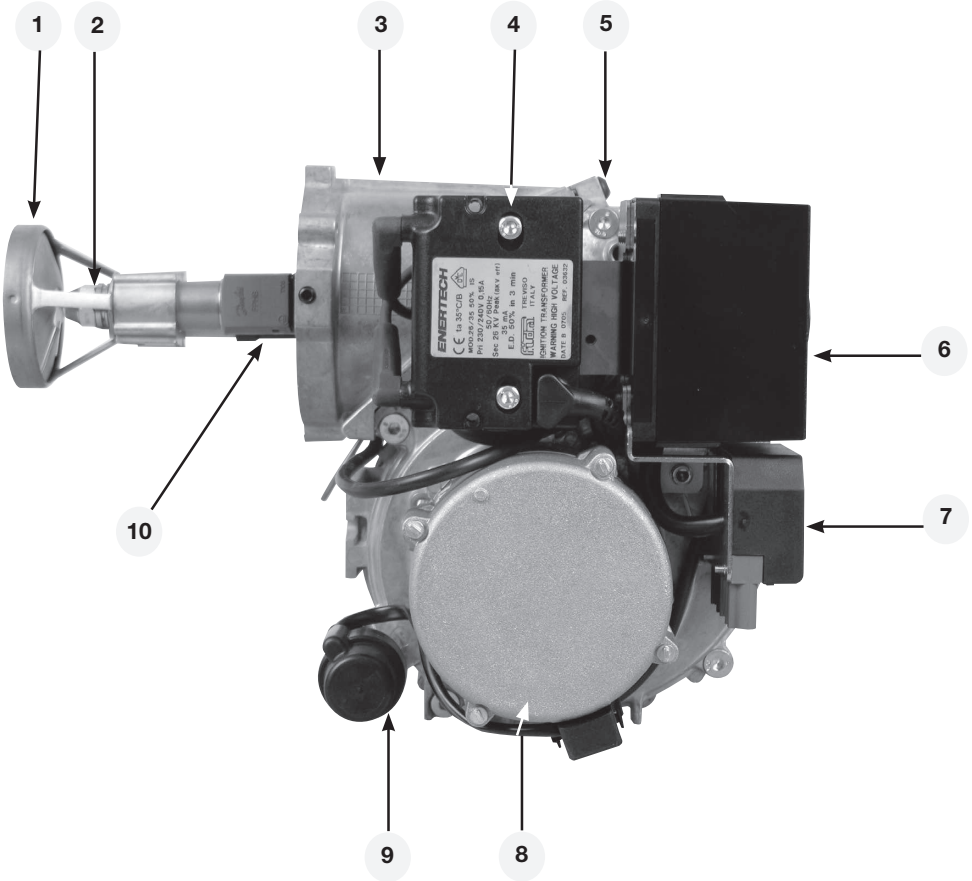

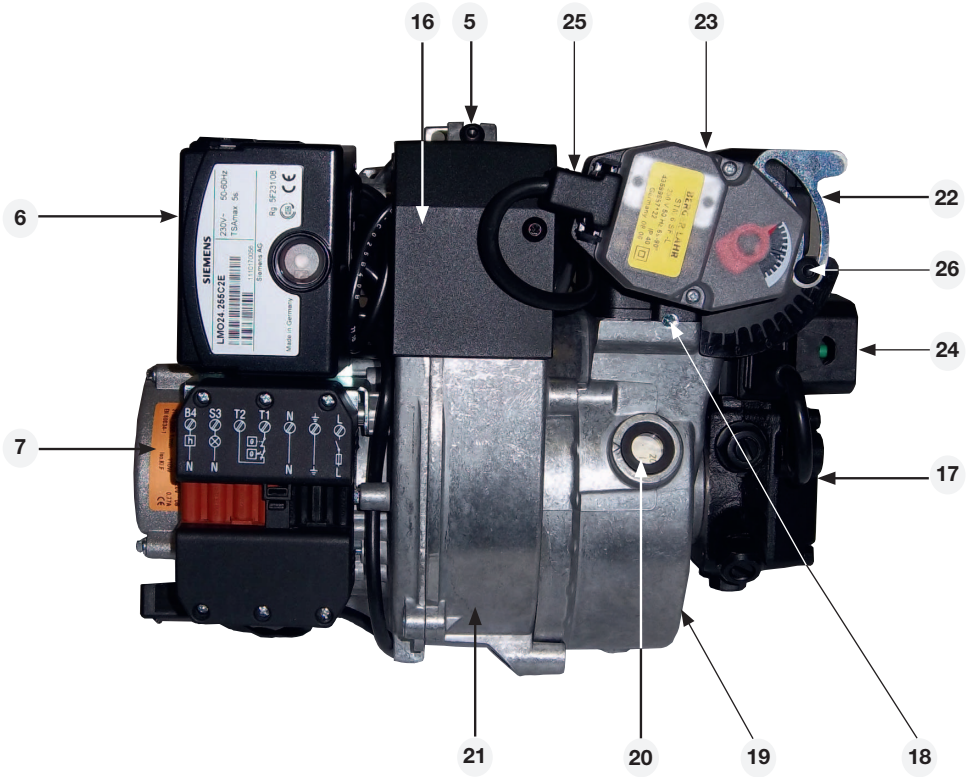

1.5.1 Components

1. Brake plate
2. Nozzle
3. Fan housing, front
4. Ignition transformer
5. Separating screw
6. Oil burner control
7. Electrical contact X1 (refer to wiring diagram)
8. Motor
9. Capacitor
10. Preheater, where fitted
11. Ignition electrode
12. Ignition cable
13. Photoresistor
14. Inspection glass
15. Nozzle assembly adjustment
16. Cover plate
17. Oil pump
18. Air regulator second stage
19. Air intake
20. Air flow indicator
21. Fan housing, rear
22. Air regulator, first stage
23. Damper motor M2
24. Electrical contact, second stage
    X5 and X6 (refe to wiring diagram)
25. Contact damper motor
26. Screw lock adjustment, first stage

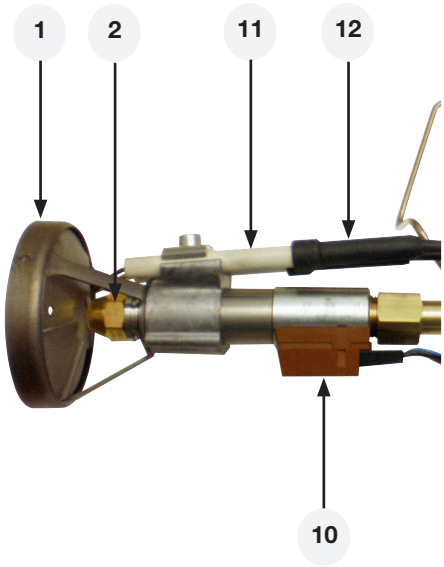

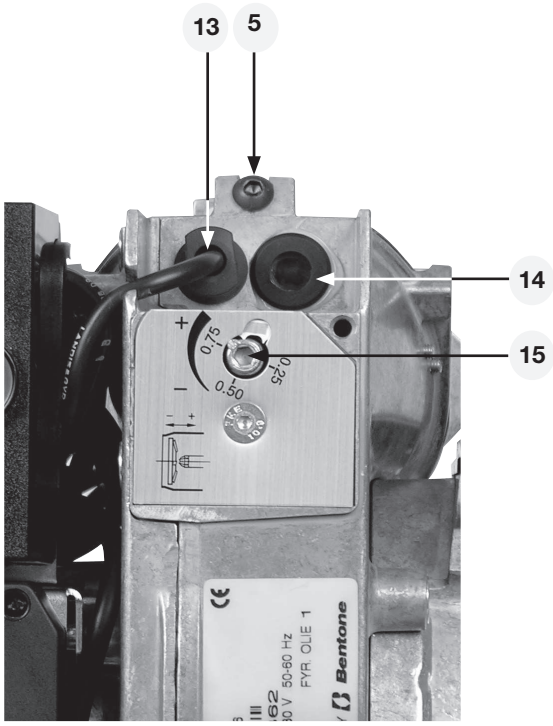

2. INSTALLATION

2.1 Delivery checks

Check that everything has been delivered and that the goods are not transport damaged. Any delivery faults must be reported to the supplier. Transport damage must be reported to the forwarder.

2.2 Preparations for installation

Check that the burner's measurements and capacity range is suitable for the boiler in question. The power information on the data plate refers to the burner's max. and min. power.

2.3 Oil supply

In order to achieve good operational reliability it is important that the oil supply system is laid out correctly.

Observe the following:

- Choice of pipe diameters, pipe lengths and height differences (refer to pump instructions).
- Piping should be run with a minimum of joints/compression fittings.
- Pipework must be laid out so that oil hoses are not subjected to tension or overbending when the burner is swung out or removed for service.
- The oil filter should be installed so that the filter cartridge can easily be replaced

2.4 Electrical connection

Before electrical installation is begun, electricity must be switched off at the main switch. If the boiler has a 7-pole or a 4-pole Eurostecker (only on 2-stage burners), these often fit directly to the burner. Otherwise use the connectors supplied. The operating thermostat, the max. thermostat and the inspection hatch (where fitted) interlock can then be wired in series on the incoming phase connected to L1 or connected between T1 and T2. In the first mentioned case a jumper is installed between T1 and T2.
(Refer to connection in the section Electrical equipment).

! If any electrical connection is used other than that recommended by Enertech, there may be a risk of equipment damage and personal injury.

2.5 Choice of nozzle

(Technical data): Recommended nozzle and nozzle table.

2.6 Brake plate and airflow setting

Before operations basic burner setting may be made according to the diagram. (Refer to basic settings). Note that this only refers to the basic setting; the setting must be adjusted after the burner has been started. At this time flue gas analysis and soot measurement must be carried out.

2.7 Burner installation

2.7.1 Hole pattern

Check that the hole pattern matches the flange supplied.
(Refer to Technical data.)

2.7.2 Burner installation

1. Install the flange and the gasket on the boiler.
2. Attach the front piece to the flange.
3. Insulate between the burner register and the boiler cover for reduced heat radiation.
4. Install the selected nozzle. (Refer to Technical data.)
5. Install the brake plate and check the ignition electrodes (refer to Burner service.).
6. Install the burner body to the front piece and lock with screw (E).

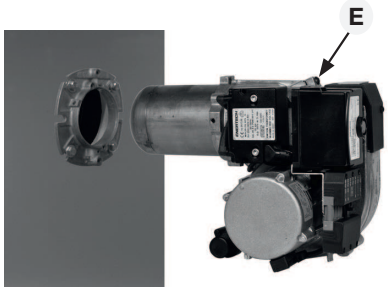

2.7.3 Oil pipes

1. Check the oil pipe dimensions. (Refer to Pump Instructions.)
2. The oil filter should be installed in the oil supply line. If an air separator is fitted, the oil filter should be installed before the air filter to increase the life span of the filter.
3. For one-pipe systems the return plug must be removed. (Refer to Pump Instructions.)
4. When installing oil hoses, check that the supply and return hoses are connected to the correct connections on the oil pump. The hoses must be run so that they are not bent or tensioned.
5. Purge the oil system. The oil pump will be damaged if it is run dry.
6. The vacuum should not be lower than 0.3 bar depression in the suction line at start up.

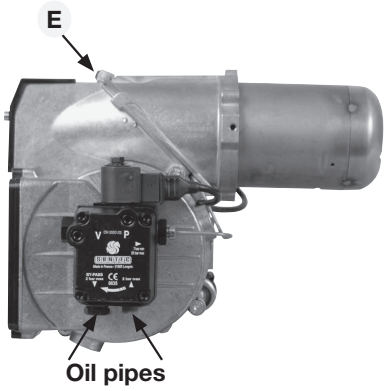

2.7.4 Electrical connection

If the boiler lacks ready-connected plugs, connect using the supplied plug, X2 in accordance with the wiring diagram.

1. Disconnect the power at the main switch.
2. Wire the Eurostecker X2 as in alt. 1–3 (refer to Electrical equipment).
3. Connect the Eurostecker X2 to the burner.
4. Switch on the power at the main switch.

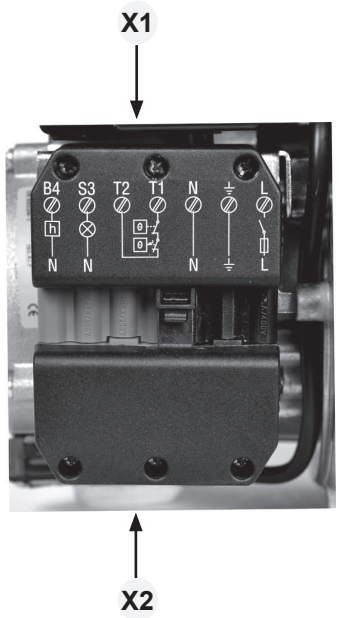

3. BASIC SETTINGS

3.1 Example of basic setting for two-stage burners

3.1.1 Choice of nozzle

Burner output	Max	38	kW		
	Min	50	kW		
Estimated nozzle output:		80/11,86*		=	6,75 kg/h

The nozzle output is calculated for two-stage burners with a nozzle at maximum load.
Choice of nozzle according to the table. (See technical data).
Choice of nozzle is based on the maximum load, while minimum load is set by the choice of pump pressure.

According to the nozzle table, this provides the following nozzle.

Nozzle:	1,25	Gph
Pump pressure max. load:	20	bar

Power in max. load:	6,66	kg/h	=> 6,66 x 11,86* = 79 kW

Pump pressure min. load:	8	bar	
Power in min. load:	4,16	kg/h	=> 4,16 x 11,86* = 49 kW
* Calorfic value Light oil			= 11,86 kWh/kg

3.1.2 Basic settings

The setting value for maximum load 80 kW and minimum load 50 kW according to the basic settings tables. For the correct setting procedures, see 3.1.3 Nozzle assembly adjustment and 3.1.4 Air intake adjustment. (See technical data ...)

Air settings	Max	21,5
	Min	5,5
Nozzle assembly	Max	21
	Min	21

3.1.3 Nozzle assembly adjustment

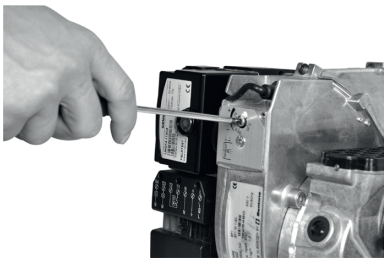

The burner is fitted with a regulator which changes the brake plate position in the blast tube. This is used to set the correct pressure drop across the combustion assembly and thereby achieve good combustion without pulsation.

The setting to be chosen is dependent among other things on set output and furnace pressure.

Brake plate setting

- Less diffusion: turn screw to left.
- More diffusion: turn to right.

Setting brake plate position affects air flow. It is therefore always necessary to adjust the air with the burner air regulator afterwards.

3.1.4 Air intake adjustment

For two-stage burners, the amount of air is set in two different positions. When performing adjustments, the maximum load must always be adjusted first. This is because adjusting the air damper for the maximum load may affect the air quantity for the minimum load. The maximum load is adjusted by turning the air regulator (Y). The air setting at maximum load will then operate so that when the boiler is calling for the maximum load, the damper motor opens completely and the amount of air for combustion is controlled by the air regulator (Y). Minimum load is set by loosening the screw (X) and adjusting the control plate (Z) for the damper powered by the damper motor.

3.1.5 Procedure for setting the amount of air

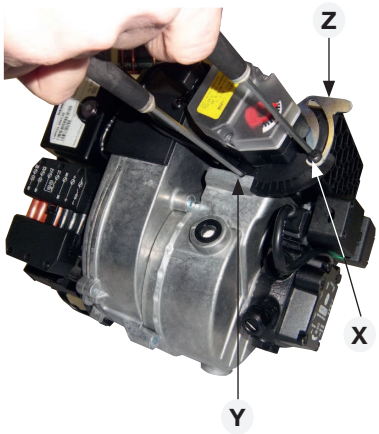

The air quantity setting for the maximum load is adjusted by turning screw (Y) with an Allen key. How open the damper must be is determined by the heat output and overpressure in the boiler as well as other settings on the burner such as the position of the brake plate. To adjust the burner as quickly and as easily as possible, adjustments should always start with the maximum load, as adjustments here also affect the minimum load.

Set the minimum load by adjusting the control plate (Z). By changing settings on the control plate towards the higher values on the scale, the opening of the damper powered by the damper motor increases, thus increasing the amount of air for the combustion process. To reduce the amount of air, perform the opposite adjustment. When adjusting the minimum load, you should always make sure that the damper for maximum load is open far enough so that it has no significant effect on the amount of air for the minimum load. The adjustment should be performed alternately: first adjustment of the minimum load followed by adjustment of the maximum load and then repeat the procedure unless acceptable combustion is achieved.

3.1.6 Inlet cone, air adjustment

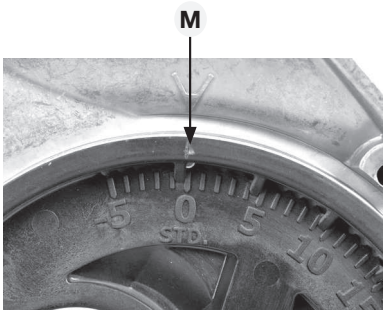

Airflow is also affected by the position of the inlet cone. However, it is extremely rare that this needs to be adjusted; it should be left in the standard STD position to achieve good starts and operations. (A cast-in arrow on the fan housing indicates the position of the inlet cone. In addition to the scale on the inlet cone casting, there is also a mark (M) indicating the factory setting.)

3.1.7 Rotation of the air intake

The air intake of the burner can be rotated, although the rotation options are limited due to the two-stage control. In principle it is possible to install the air intake pointing upwards. It is also possible to rotate the air intake so that the burner can be adapted to different environments.
To rotate the air intake, loosen the three screws holding the air intake and the two screws holding the pump. Depending on how much the air intake is to be rotated, cabling will be required and the two-stage control must be removed. Then rotate the air intake to the desired position and tighten the screws. Where appropriate, fit the cabling and two-stage control in a position which allows for adjustment. When changing to certain positions on the air intake, the screw for the air control must be removed and then fitted in a position which allows the air to be adjusted.
The position of the air intake affects the air flow through the burner somewhat. The position that provides maximum flow is with the air intake pointing downwards.

3.1.8 Air duct

A hose connection air duct is available in three different dimensions: 48, 68, and 78 mm outer diameter (D). The air duct is installed on the air intake at the place where the grille is attached in the standard model

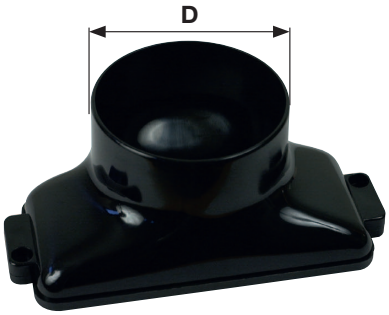

4. BURNER SERVICING

4.1 Warning

Service should be carried out after 3,000 operating hours, or at least once per year.
Only authorized personnel may perform service.
Before any type of service work is begun, switch of the power at the main switch and shut off the oil.
Exercise caution as parts which are exposed when the burner is taken apart can be hotter than 60°C. The installation engineer must be especially careful to ensure that no electrical wiring or oil lines are pinched or damaged during installation or service.

4.1.1 Service position

4.1.1.1 Service position 1

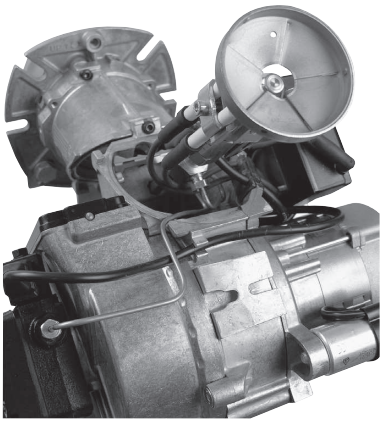

1. Switch off the main power and disconnect the 7-pole Euro plug from the burner.
2. Undo the screw which fastens the burner front piece to the fan housing, but only so much as to allow the fan housing to be removed from the burner front piece.
3. Remove the fan housing from the burner front piece and pull it backwards until the combustion assembly is free of the burner front piece.
4. Suspend the fan housing by the fan housing attachment point (for joining the front piece to the fan housing) on the screw (for joining the front piece to the fan housing) as illustrated to the left. If necessary, tighten the screw somewhat to ensure that the burner is suspended safely.något för att få brännaren att hänga säkrare.

4.1.1.2 Service position 2

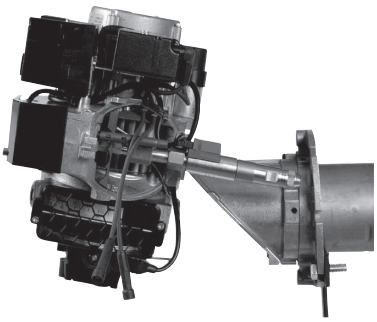

1. Switch off the main power and disconnect the 7-pole Euro plug from the burner.
2. Undo the screw which fastens the burner front piece to the fan housing, but only so much as to allow the fan housing to be removed from the burner front piece.
3. Remove the fan housing from the burner front piece and pull it backwards until the combustion assembly is free of the burner front piece.
4. Turn the screw into the front piece until there is a gap of approx. 5 mm between the metal and the screw head.
5. Suspend the fan housing by the fan housing service attachment on the screw used for joining the front piece to the fan housing, with the motor upwards, as shown in the illustration to the left.

! When servicing or replacing components that affect combustion, analyses and soot tests must be carried out on the installation.

4.1.1.3 Service position 3

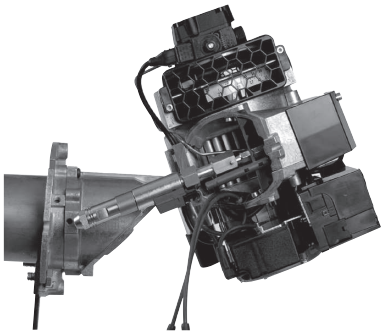

1. Switch off the main power and disconnect the 7-pole Euro plug from the burner.
2. Undo the screw which fastens the burner front piece to the fan housing, but only so much as to allow the fan housing to be removed from the burner front piece.
3. Remove the fan housing from the burner front piece and pull it backwards until the combustion assembly is free of the burner front piece.
4. Turn the screw into the front piece until there is a gap of approx. 5 mm between the metal and the screw head.
5. Suspend the fan housing by the fan housing service attachment on the screw used for joining the front piece to the fan housing, with the air intake upwards, as shown in the illustration to the left.

4.1.2 Combustion assembly service

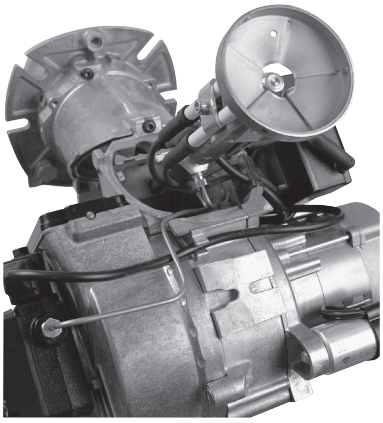

1. Switch off the main power and disconnect the 7-pole Euro plug from the burner.
2. If so desired, service position 1 may be used.
3. Carry out a visual inspection of the combustion assembly and check the various parts for defects.
4. Undo and remove the brake plate and the electrode package from the oil pipe. Clean the brake plate as necessary.
5. Screw off the nozzle.
6. Install the nozzle. The nozzle may not be cleaned; it must be replaced with a new nozzle if the existing one is considered defective.
7. Check the ignition electrodes. Replace as necessary (refer to Technical data for electrode settings).
8. Install the brake plate and electrode package. Check that the distance between the nozzle and brake plate is correct (refer to Technical data).
9. Undo the screw that the fan housing is suspended from. Reassemble the front piece and the fan housing and fasten them together.
10. Connect the 7-pole Euro plug and turn on the mains power.
11. Start the burner and check the combustion.

! When servicing or replacing components that affect combustion, analyses and soot tests must be carried out on the installation.

4.1.3 Preheater replacement

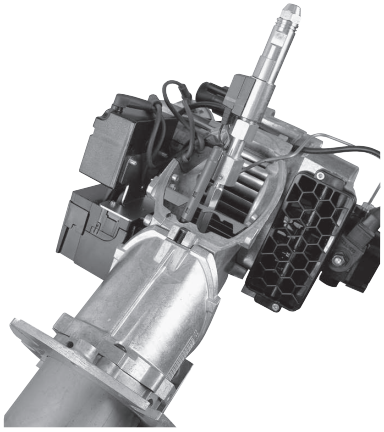

1. Switch off the main power and disconnect the 7-pole Euro plug from the burner.
2. If so desired, service position 1 may be used.
3. Remove the brake plate and electrode package.
4. Disconnect the preheater cable from the preheater.
5. Screw off the nozzle.
6. Undo the nut that connects the oil pipe to the preheater.
7. Install the new preheater. Check the condition of the O-ring; replace as necessary.
8. Connect the preheater cable.
9. Install the nozzle.
10. Install the brake plate and electrode package. Check that the distance between the nozzle and brake plate is correct (refer to Technical data).
11. Re-assemble the burner.
12. Connect the 7-pole Euro plug and turn on the mains power.
13. Start the burner and check the combustion.

4.1.4 Oil pump replacement

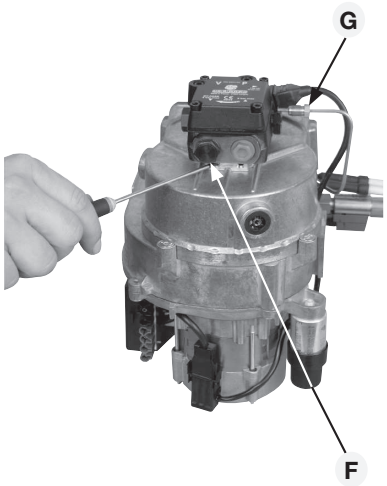

1. Switch off the main power and disconnect the 7-pole Euro plug from the burner.
2. Disconnect the oil hoses from the oil pump.
3. If so desired, service position 3 may be used.
4. Remove the solenoid cable from the pump.
5. Remove the connecting pipe (G) from the pump.
6. Undo the screws (F) and pull out the oil pump.
7. Install the oil pump in the burner. Tighten the screws and attach the connecting pipe (G). (It is important that the splines engage the pump coupling correctly.)
8. Connect the oil hoses. (For conversions from one- and two-pipe systems refer to the Pump instructions.)
9. Connect the 7-pole Euro plug and turn on the mains power.
10. Start the burner, purge the pump, adjust to correct pressure and check combustion

! When servicing or replacing components that affect combustion, analyses and soot tests must be carried out on the installation.

4.1.5 Fan motor replacement

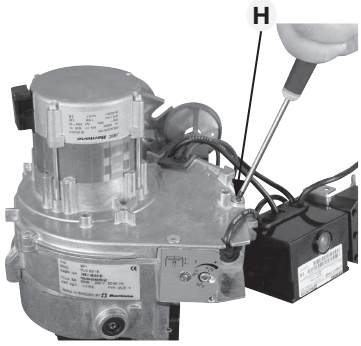

1. Switch off the main power and disconnect the 7-pole Euro plug from the burner.
2. If so desired, service position 2 may be used.
3. Remove the electrical connection from the motor.
4. Remove the electrical box retaining screw.
5. Remove the cable conduit entry to the ignition electrodes and the preheater (where fitted) and remove the photocell cable from the motor flange.
6. Undo the screws (H) to the motor flange, 5 pcs.
7. Lift away the motor.
8. Remove the drive coupling end from the motor shaft, loosen and remove the fan wheel.
9. Install the fan wheel on the new motor, tighten the locking screw. The fan wheel must be installed in the bottom position toward the motor shaft. Install the drive coupling end.

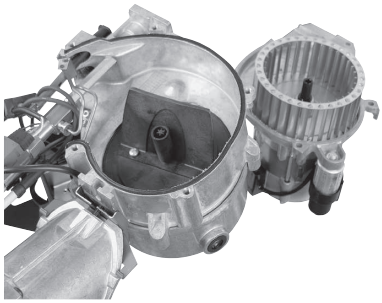

10. Align and fit the motor flange to the fan housing. Pay attention to the drive coupling so that it does not fall out, and also that it aligns correctly in the drive coupling end of the motor and pump.
11. Bolt the motor flange and fan housing together. Tighten the screws diagonally, and do not tighten hard one at a time. This is in order to ensure the fan housing and the motor flange assume the correct relative positions.
12. Place the cable conduit entry and the photocell cable in position.
13. Screw the electrical console in place.
14. Connect the motor wiring.
15. Join together the fan housing and the burner front piece.
16. Connect the 7-pole Euro plug and turn on the mains power.
17. Start the burner and check the combustion.

! When servicing or replacing components that affect combustion, analyses and soot tests must be carried out on the installation.

4.1.6 Air intake and intake cone service

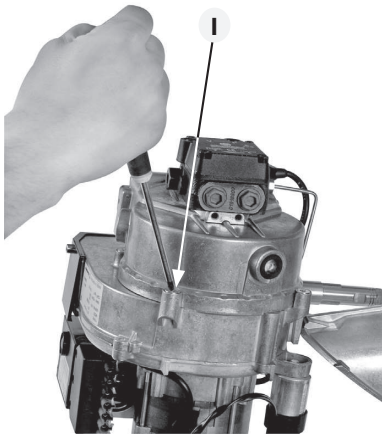

1. Switch off the main power and disconnect the 7-pole Euro plug from the burner.
2. If so desired, service position 3 may be used.
3. Disconnect the cable to the damper motor, the cable to the second-stage thermostat and the cables to the solenoid valve pump.
4. Unscrew the cover of the 4-pole Euro plug to the second-stage thermostat and remove it from its attachment.
5. Remove the connecting pipe from the pump.
6. Undo the air intake retaining screws (I).
7. Remove the air intake.
8. Undo the inlet cone retaining screw; make note of the inlet cone position.
9. Remove the inlet cone from the fan housing.
10. Check the function and visual condition of the various air regulator components. Clean and replace components as necessary.
11. Re-assemble the burner. Be especially careful when installing the inlet cone; install it in the same position it had at removal.
12. Fit the O-ring in the groove between the fan housing and inlet cone. Ensure that it is properly located in the groove and is not damaged when the air intake is fitted.
13. Fit the air intake and tighten the connecting pipes to the pump.
14. Connect the 4-pole Euro plug to the second-stage thermostat.
15. Connect the connectors to the damper motor, second-stage thermostat and solenoid valves.
16. Connect the 7-pole Euro plug and turn on the mains power.
17. Start the burner and check the combustion.

4.1.7 Fan wheel checks

4.1.7.1 Inspection

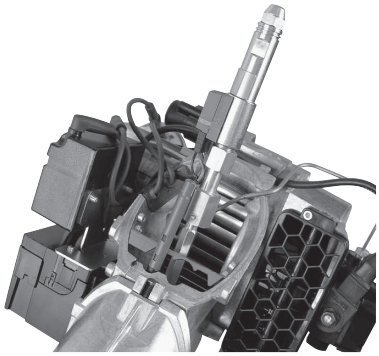

1. Switch off the main power and disconnect the 7-pole Euro plug from the burner.
2. If so desired, service position 1 may be used.
3. Perform a visual inspection of the fan wheel. Spin the fan wheel with your finger, or carefully using a tool.
4. If the fan wheel is not very dirty, clean it carefully where possible.
5. If thorough cleaning is required, refer to point 5.1.7.2 or alternatively 5.1.7.3.
6. If cleaning is not necessary, re-assemble the burner.
7. Connect the 7-pole Euro plug and turn on the mains power.
8. Start the burner and check the combustion.

! When servicing or replacing components that affect combustion, analyses and soot tests must be carried out on the installation.

4.1.7.2 Cleaning, alternative 1

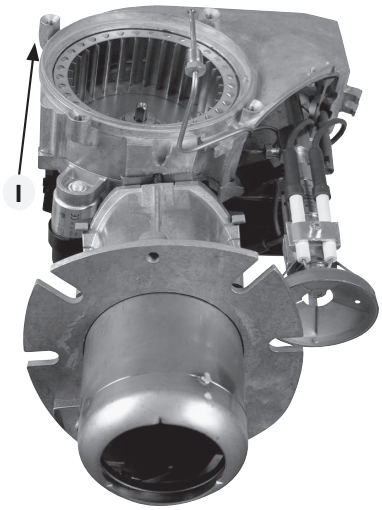

1. Switch off the main power and disconnect the 7-pole Euro plug from the burner.
2. If so desired, service position 3 may be used.
3. Remove the solenoid cable from the pump.
4. Remove the connector pipe from the pump.
5. Undo the air intake retaining screws (I).
6. Remove the air intake.
7. Undo the inlet cone retaining screw; make note of the inlet cone position.
8. Remove the inlet cone from the fan housing.
9. Clean the fan wheel. Undo and if necessary remove the fan wheel for more thorough cleaning of the fan and fan housing.
10. Install the fan wheel; tighten the retaining screw. The fan wheel must be installed in the bottom position toward the motor shaft. Install the drive coupling end.
11. Re-assemble the burner. Pay attention to the drive coupling so that it does not fall out, and also that it aligns correctly in the drive coupling end of the motor and pump.
12. Fit the inlet cone in the same position as before disassembly
13. Fit the O-ring in the groove between the fan housing and inlet cone. Ensure that it is properly located in the groove and is not damaged when the air intake is fitted.
14. Connect the 7-pole Euro plug and turn on the mains power.
15. Start the burner and check the combustion.

! When servicing or replacing components that affect combustion, analyses and soot tests must be carried out on the installation.

4.1.7.3 Cleaning, alternative 2

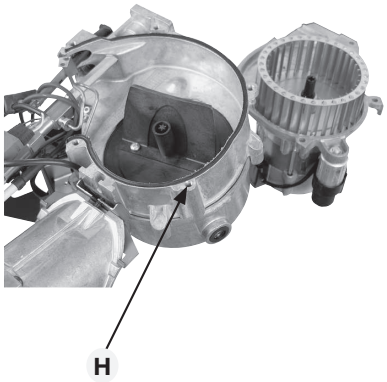

1. Switch off the main power and disconnect the 7-pole Euro plug from the burner.
2. If so desired, service position 2 may be used.
3. Remove the electrical connection from the motor.
4. Remove the electrical box retaining screw.
5. Remove the cable conduit entry to the ignition electrodes and the preheater (where fitted) and remove the photocell cable from the motor flange.
6. Undo the motor flange retaining screws (H), 5 pcs.
7. Lift away the motor.
8. Clean the fan wheel and the fan housing. For more thorough cleaning remove the drive coupling from the motor shaft and loosen and remove the fan wheel.
9. Install the fan wheel on the motor and tighten the locking screw. The fan wheel must be installed in the bottom position toward the motor shaft. Install the drive coupling end.
10. Align and fit the motor flange to the fan housing. Pay attention to the drive coupling so that it does not fall out, and also that it aligns correctly in the drive coupling end of the motor and pump.
11. Screw the motor flange and the fan housing together. Tighten the screws diagonally, and do not tighten hard one at a time. This is in order to ensure the fan housing and the motor flange assume the correct relative positions.
12. Place the cable conduit entry and the photocell cable in position.
13. Screw the electrical box in place.
14. Connect the motor wiring.
15. Join together the fan housing and the burner front piece.
16. Connect the 7-pole Euro plug and turn on the mains power.
17. Start the burner and check the combustion.

4.1.8 Electrical module

Check that the electrical console retaining screw is tight so that good contact to earth is established between the console and the burner body. Only use electrical components recommended by Enertech.

When servicing or replacing components that affect combustion, analyses and soot tests must be carried out on the installation.

4.1.8.1 Replacement of complete electrical package

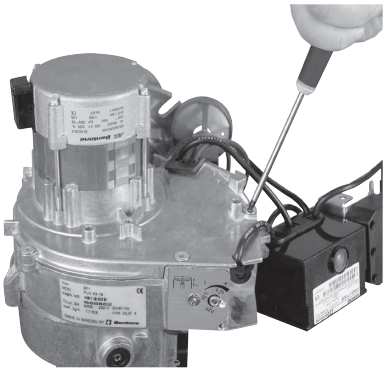

1. Switch off the main power and disconnect the 7-pole Euro plug from the burner.
2. If so desired, service position 2 may be used.
3. Disconnect the electrical contact to the motor, damper motor and the 4-pole Euro plug to the second-stage thermostat.
4. Remove the cover of the 4-pole Euro plug to the second-stage thermostat and remove it from its attachment.
5. Remove the electrical box retaining screw.
6. Remove the cable conduit entry to the ignition electrodes and the preheater (where fitted) and remove the photocell cable from the motor flange.
7. Install the new electrical package.
8. Place the cable conduit entry and the photocell cable in position.
9. Screw the electrical box in place.
10. Fit the 4-pole Euro plug to the second-stage thermostat in its attachment and fit the cover to it.
11. Connect the motor cable, damper motor and the 4-pole Euro plug to the second-stage thermostat.
12. Assemble the fan housing and burner front piece.
13. Connect the 7-pole Euro plug and turn on the mains power.
14. Start the burner and check the combustion.

4.1.8.2 Replacement of individual electrical components

1. Switch off the main power and disconnect the 7-pole Euro plug from the burner.
2. If so desired, service position 2 may be used.
3. Remove the oil burner control.
4. Disconnect the wires to the components that are to be replaced.
5. Insert the new wires.
6. Install the oil burner control.
7. Assemble the fan housing and burner front piece.
8. Connect the 7-pole Euro plug and turn on the mains power.
9. Start the burner and check the combustion.

! When servicing or replacing components that affect combustion, analyses and soot tests must be carried out on the installation.

4.1.8.3 Replacing the damper motor

1. Switch off the main power and disconnect the 7-pole Euro plug from the burner.
2. Disconnect the electrical contact from the damper motor.
3. Unscrew the two screws that hold the damper motor. Remove the motor.
4. Fit the new motor. Ensure that the flat surface of the motor shaft is fitted against the corresponding surface in the damper hole.
5. Connect the electrical contact to the damper motor.
6. Connect the 7-pole Euro plug and turn on the mains power.
7. Start the burner and check the combustion.

! When servicing or replacing components that affect combustion, analyses and soot tests must be carried out on the installation.

5. PUMP INSTRUCTIONS

5.1 Suntec AT2 45C

5.1.1 Technical data

Viscosity range:	2,0-12 mm²/s
Pressure range:	8-25 bar
Rated voltage of coil:	220/240V 50/60 Hz
Oil temperature:	max 60°C

5.1.2 Components

1. Solenoid valve Stage 2
2. Solenoid valve Stage 1
3. Nozzle outlet G 1/8
4. Pressure gauge port G 1/8”
5. Vacuum gauge port G 1/8”
6. Pressure gauge port G 1/8”
   (Pressure measurement)
7. Return line G 1/4”
   and internal by-pass plug
8. Suction line G 1/4”
9. Pressure adjustment Stage 2
10. Pressure adjustment Stage 1

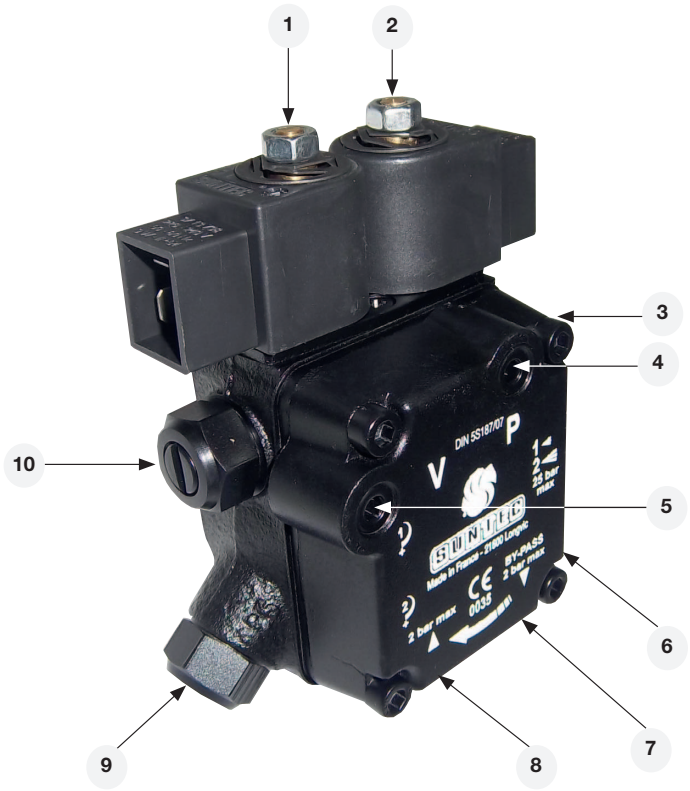

Shaft rotation and nozzle location

C: Motor rotation
Oil flow connection point to the nozzle on the left side (viewed from shaft end)

Gear set capacity
(see pump capacity curves)

Standard model

Solenoid valve
with cut-off

AT 2 45 C

Exchange of filter

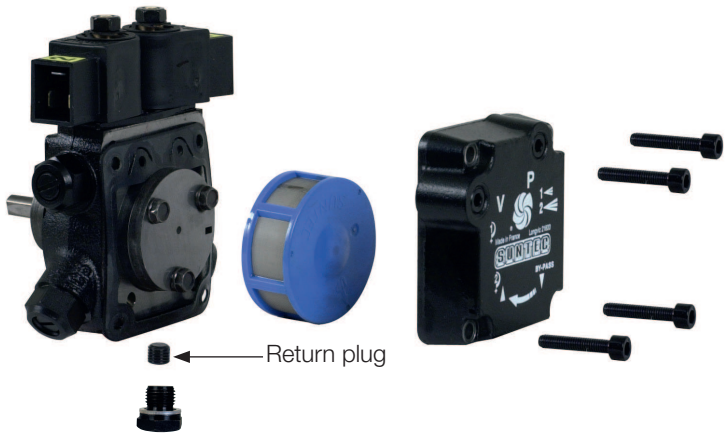

5.1.3 Function AT2 45C

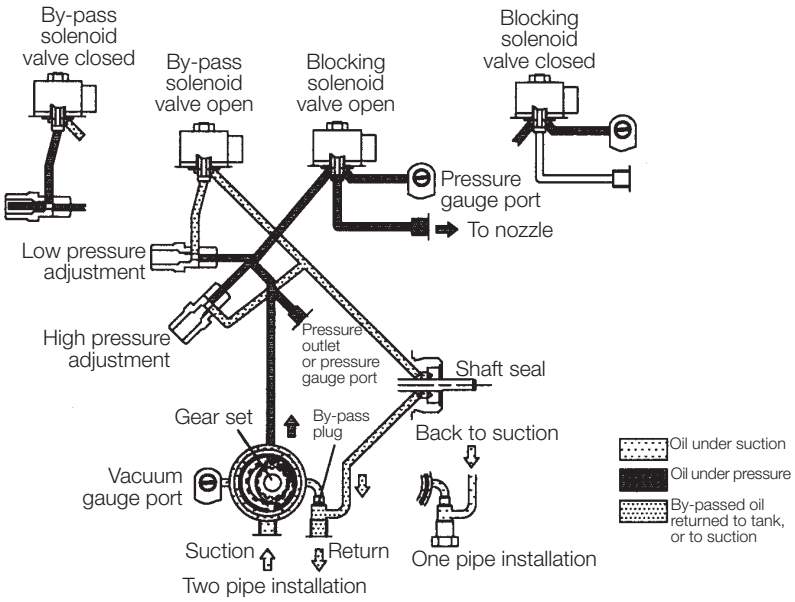

- Light oil
- Nozzle flow up to 45 l/h (approx. 460 000 kcal/h - 534 kW)
- One or two-pipe system

Pump operating principle

The oil pump has a built in solenoid valve which controls the regulator cut-off valve giving fast cut-off and cut-on function independent of the rotational speed.

The gear-set draws oil from the tank through the built-in filter and transfers it to the valve that regulates the oil pressure to the nozzle line.

All oil which does not go through the nozzle line will be dumped through the valve back to the return line or, if it is a one-pipe installation, back to the suction port in the gear-set.

- Two-pipe operation

When the solenoid valve is non-activated, the by-pass channel between the pressure and return sides of the valve is open.

No pressure will then be built up to open the valve. It does not matter which speed the gear set has.

When the solenoid is activated, this by-pass channel will be closed and because of the full speed of the gear-set, the pressure necessary to open the valve will be built up very rapidly which gives a very sharp cut-on function.

- One-pipe operation

Bleeding on one-pipe is not automatic, and a pressure port must be opened to bleed the system.

Cut-off

When the burner stops, the solenoid opens the by-pass at the same moment which drains all the oil down to the return and the nozzle valve closes immediately. This gives a very sharp cut-off function

The cut-on and off can be regulated regardless of motor speed and has an extremely fast response.

When the solenoid is non activated, the torque requirement is low up to full motor speed.

5.1.4 Suction pipe tables AT2 45C

5.1.4.1 Overhead Tank

One-pipe system

Height m / Line diameters	4,0	3,0	2,0	1,0	0,5	0,0
ø 4 mm	28	24	21	18	16	14
ø 6 mm	100	100	100	92	83	75
ø 8 mm	100	100	100	100	100	100

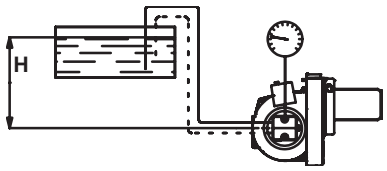

Two-pipe system

Height m / Line diameters	4,0	3,0	2,0	1,0	0,5	0,0
ø 6 mm	29	25	22	18	16	14
ø 8 mm	96	85	73	61	55	49
ø 10 mm	100	100	100	100	100	100

5.1.4.2 Underlying Tank

One-pipe system

For reliable operations, use of a Tigerloop is recommended in underlying tanks.

Two-pipe system

Height m / Line diameters	0,0	-0,5	-1,0	-2,0	-3,0	-4,0
ø 6 mm	14	12	10	7	3	0
ø 8 mm	49	43	37	26	14	2
ø 10 mm	100	100	94	65	37	8

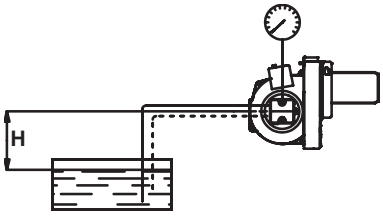

The suction line tables consist of theoretically calculated values where the pipe dimensions and oil velocity have been matched so that turbulences will not occur. Such turbulences will result in increased pressure losses and in acoustic noise in the pipe system. In addition to drawn copper piping a pipe system usually comprises 4 elbows, a non-return valve, a cut-off valve and an external oil filter.

The sum of these individual resistances is so insignificant that they can be disregarded. The tables do not include any lengths exceeding 100 m as experience shows that longer lengths are not needed.

The tables apply to a standard fuel oil of normal commercial quality according to current standards. On commissioning with an empty tube system the oil pump should not be run without oil for more than 5 min. (a condition is that the pump is being lubricated during operation).

The tables state the total suction line length in metres at a nozzle capacity of 3,0 Gph. Max. permissible pressure at the suction and pressure side is 2,0 bar. For two-pipe system Q_{max}= 55l/h pump capacity at 0 bar.

5.2 Danfoss BFP 52E

5.2.1 Technical data

Viscosity range:	1,8–12,0 mm²/s
Pressure range:	7–25 bar
Rated voltage of coil:	220/240V 50/60 Hz
Oil temperature:	–10 to +70°C

5.2.2 Components

1. Solenoid valve Stage 2
2. Solenoid valve Stage 1
3. Cartridge Filter
4. Nozzle outlet G 1/8
5. Return plug
6. Vacuum outlet G 1/8”
7. Pressure gauge port G 1/8” (Pressure measurement)
8. Vacuum gauge port G 1/8”
9. Suction line G 1/4”
10. Return line G 1/4”
11. Pressure adjustment Stage 1
12. Pressure adjustment Stage 2

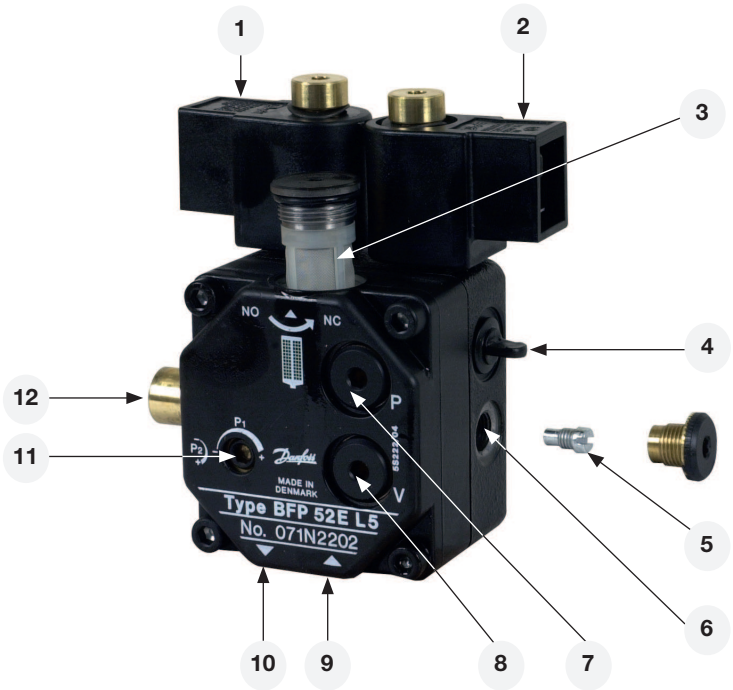

How to remove cartridge filter from plug

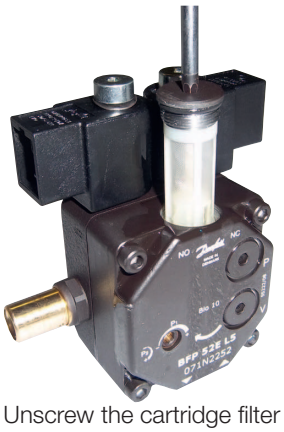

Unscrew the cartridge filter plug in the cover by means of a 4 mm allen key and withdraw the cartridge filter. If necessary, put a screwdriver between the cartridge filter and the plug and turn the cartridge filter carefully until it comes off. Reject the cartridge filter and replace it by a new one. Press it on to the plug. Ensure that the O-ring is not damaged. Then fit the new cartridge filter to the pump.

5.2.3 Function BFP 52E

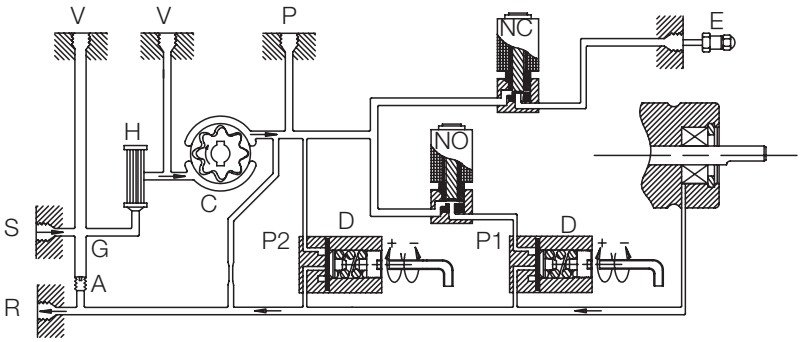

When the oil pump is started, oil is drawn from the suction connection (S) through the filter (H) to the gear wheel (C).

From here the gear wheel pumps the oil over to the pressure side in connection with the pressure regulation (P1) and (P2).

When the oil reaches the cut-off valve (NC), the pressure rises until regulating valve (P1) opens and holds the pressure constant at the set level. When voltage is applied to the cut-off valve (NC) it opens and releases oil to the nozzle (E). Surplus oil is led through the return channel to the return connection (R). The pump will now run at the pressure set for stage 1, since stage 1 is adjusted to a lower pressure than stage 2. If voltage is applied to the solenoid valve (NO), it closes and sets the regulating valve (P1) out of action. The pressure will now rise to the setting on regulating valve (P2).

The valve (P2) opens and holds the pressure constant at the set value for stage 2. Surplus oil is led back through the return channel to the return connection (R). On a 2-pipe unit the oil is led back to the oil tank.On a 1-pipe unit the oil is recirculated across the changeover valve (A) through the return channel (G). The return connection (R) is blanked off with a plug.

When the burner stops, the voltage to the solenoid valves is cut off so that the NC valve closes and the NO valve opens. The oil flow to the nozzle is cut off by the NC valve.

5.2.4 Suction pipe tables BFP 52E

5.2.4.1 Overhead Tank

One-pipe system

Height m / Line diameters	4,0	3,5	3,0	2,5	2,0	1,5	1,0	0,5
ø 4 mm	66	57	49	41	33	25	16	8
ø 5 mm	100	100	100	100	80	60	40	20
ø 6 mm	100	100	100	100	100	100	83	41

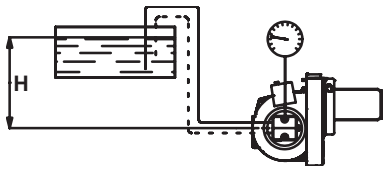

Two-pipe system

Height m / Line diameters	4,0	3,5	3,0	2,5	2,0	1,5	1,0	0,5
ø 6 mm	66	62	58	54	51	47	43	39
ø 8 mm	100	100	100	100	100	100	100	100
ø 10 mm	100	100	100	100	100	100	100	100

5.2.4.2 Underlying Tank

One-pipe system

For reliable operations, use of a Tigerloop is recommended in underlying tanks.

Two-pipe system

Height m / Line diameters	0,0	-0,5	-1,0	-1,5	-2,0	-2,5	-3,0	-3,5	-4,0
ø 6 mm	35	31	27	23	19	15	11	7	3
ø 8 mm	100	98	85	73	60	48	35	23	11
ø 10 mm	100	100	100	100	100	100	86	56	26

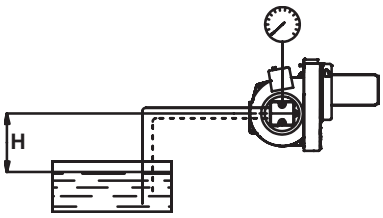

The suction line tables consist of theoretically calculated values where the pipe dimensions and oil velocity have been matched so that turbulences will not occur.

Such turbulences will result in increased pressure losses and in acoustic noise in the pipe system. In addition to drawn copper piping a pipe system usually comprises 4 elbows, a non-return valve, a cut-off valve and an external oil filter. The sum of these individual resistances is so insignificant that they can be disregarded. The tables do not include any lengths exceeding 100 m as experience shows that longer lengths are not needed.

The tables apply to a standard fuel oil of normal commercial quality according to current standards. On commissioning with an empty tube system the oil pump should not be run without oil for more than 5 min. (a condition is that the pump is being lubricated during operation).

The tables state the total suction line length in metres at a nozzle capacity of 5,0 kg/h and 2,15 mm^2/s (cSt). Max. permissible pressure at the suction and pressure side is 2,0 bar.

5.2.4.3 Purging

On 1-pipe systems it is necessary to purge the pump. On 2-pipe systems purging is automatic through the return line.

6. PREHEATER

6.2.1 Function FPHB 5

When the boiler thermostat connects, the PTC element is energized and oil begins to preheat. When the oil has reached the correct temperature, the preheater thermostat closes and the burner receives the start signal.
During operations the PTC element compensates its output so that the temperature does not become too high.
If the oil temperature is low and the oil flow high, the preheater thermostat may open owing to the PTC element's inability to maintain oil temperature. In this case it is important to use oil burner controls with a preheater holding circuit.

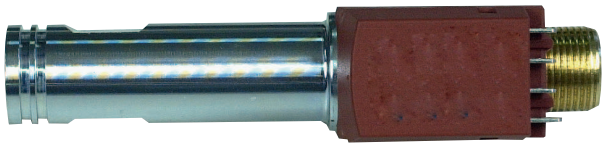

6.2.2 Function FPHB 5-LE

When the boiler thermostat connects, the PTC element is energized and oil begins to preheat. When the oil has reached the correct temperature, the preheater thermostat closes and the burner receives the start signal.
During operations the PTC element compensates its output so that the temperature does not become too high. If the oil temperature is low and the oil flow high, the preheater thermostat may open owing to the PTC element's inability to maintain oil temperature.
In this case it is important to use oil burner controls with a preheater holding circuit.

6.2.2.1 LE-valve

FPHB 5-LE has an integrated shut-off valve which prevents oil drips at start and stop. When a normal preheater is used before start, the oil expands and a small quantity of oil flows out of the nozzle orifice and wets the outside of the nozzle.
Also, when the burner stops, a small quantity of oil forces its way out after the flame has gone out, especially when there are hot components which radiate heat back to the nozzle.
The cut-off valve in the FPHB 5-LE is located immediately behind the nozzle. It opens at ≈ 6.5 bar and closes at ≈ 2.5 bar.
In order to achieve the intended effect when the pressure of the trapped oil increases, it must be evacuated back to the pump. This is made possible by the pump solenoid valve's return-valve function.

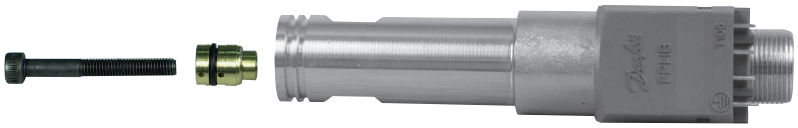

The cut-off valve can be pulled out of the preheater with the aid of an M5 screw as illustrated. When the valve is re-installed, oil pressure pushes it to a position all the way forward behind the nozzle filter so that the volume in front of the valve is as small as possible.

7. ELECTRICAL EQUIPMENT LMO24../LMO44..

7.1 Wiring diagram 2-stage

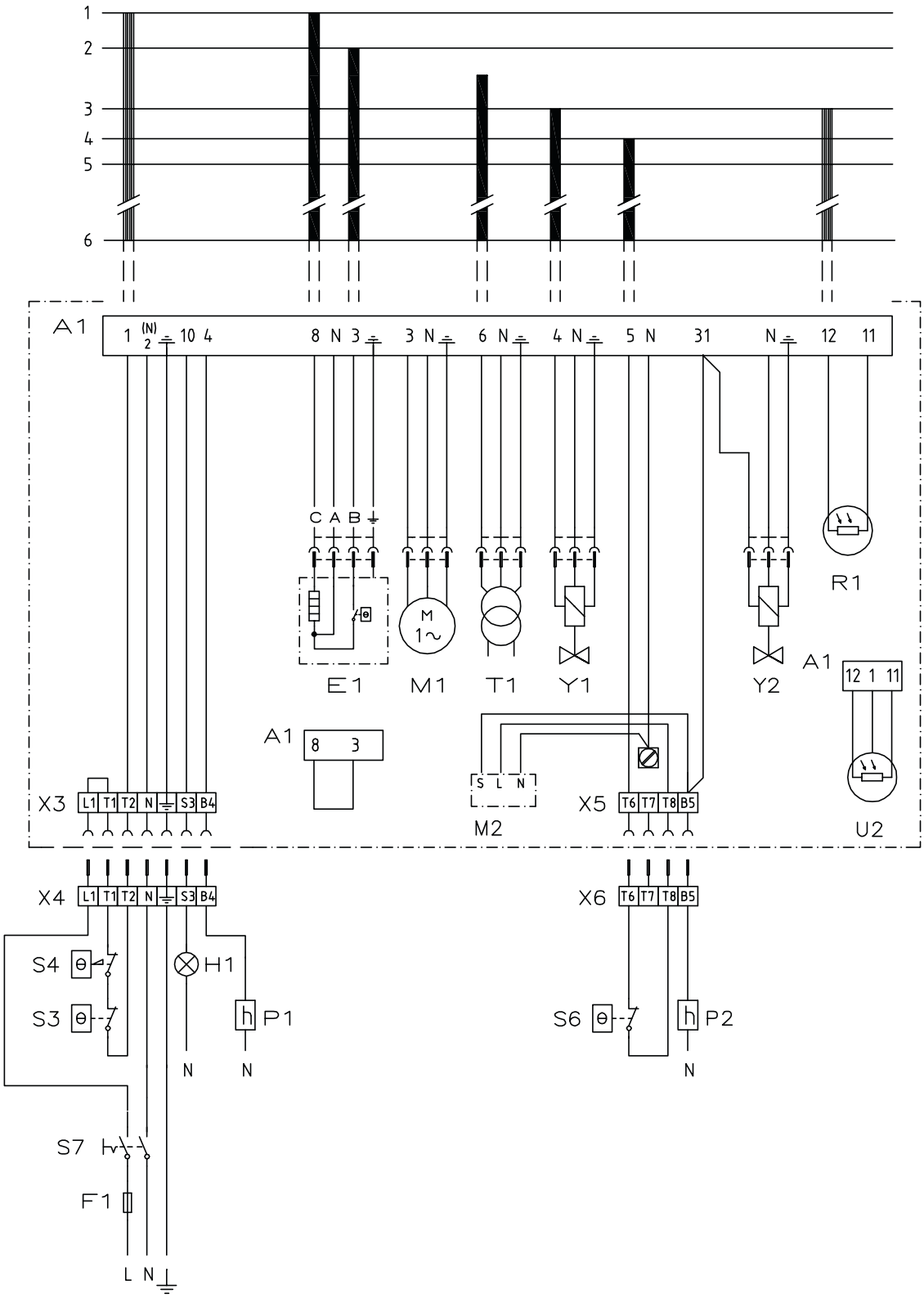

7.1.1 Component list

A1	Oil burner control	S4	Temperature limiter
E1	Preheater	S6	Control thermostat high/low
F1	Fuse, max 10 A	S7	Main switch
H1	Alarm lamp	T1	Ignition transformer
M1	Burner motor	Y1	Solenoid valve 1
M2	Damper motor STM6SF-L	Y2	Solenoid valve 2
P1	Timer meter, low capacity (Accessory)	X3	Plug-in contact, burner
P2	Timer meter, high capacity (Accessory)	X4	Plug-in contact, boiler
R1	Photocell QRB	X5	Plug-in contact high/low capacity burner
U2	UV-cell QRC	X6	Plug-in contact high/low capacity bolier
S3	Operations thermostat		

Preheater wiring colours: A Blue B Brown C Black

The installation must be connected to the mains and fused according to local regulations.

7.1.2 Function LMO24../LMO44..

1a. **Operations switch ON, thermostat ON**
The burner motor starts, ignition sparks initiated and pre-ventilation continues until the set pre-ventilation period is over and the solenoid valve (2) opens..

1b. **Operations switch ON, thermostat ON**
The preheater is energized and the pre-heating period begins. This continues until the operating temperature is reached and the preheater thermostat closes. The burner motor starts, ignition sparks initiated and pre-ventilation continues until the set pre-ventilation period is over and the solenoid valve (2) opens.

2. **Solenoid valve 1 opens**
The oil mist is formed and ignited. The photocell indicates flame. The ignition spark ceases after flame indication.
(See Technical data oil burner control)

3. **Safety period runs out**

a If the flame is not present before the end of this period, the oil burner control blocks further operation.

b If the flame for any reason disappears after this time period, the burner will make a new start attempt.

4. **High/Low thermostat ON**
The burner is in operating position and can now change between full load and low load.

4-5 **During operation**
If burner operations are interrupted via the main switch or thermostat, a new start will be initiated when conditions according to point 1 are fulfilled.

Oil burner control blocks
Red light on the oil burner control illuminates. The burner is re-started by pressing the reset button.

7.1.3 Technical data

	LMO24	LMO44
Pre-ignition period:	25 s	25 s
Pre-ventilation period:	26 s	26 s
Post-ignition period:	5 s	5 s
Safety period:	< 5 s	< 5 s
Re-connection after release:	< 1 s	< 1 s
Reaction time flame extinction:	< 1 s	< 1 s
Ambient temperature:	-20 - +60°C	-20 - +60°C
Min. current with flame:	45 µA	45 µA
Max current when dark, start:	5,5 µ A	5,5 µA
Ingress Protection:	IP 40	IP 40

Photocell current checks

Photocell current is measured with a direct current ammeter (mulitimeter µA) connected in series with the photocell.

7.1.4 Colour codes LMO14/24

When the burner starts, three signal lights in the reset switch indicate the normal sequence, as well as provide indication if something abnormal is happening in accordance with the following table:

Preheater in operation	Solid yellow
Ignition switched on	Flashing yellow
Normal operation	Solid green
Operation, poor flame signal	Flashing green
Undervoltage	Flashing yellow-red
Fault, alarm	Solid red
False light	Flashing red-green
Communication mode	Fluttering red

7.1.5 Fault codes LMO14/24

When the red light for a blocked relay box comes on, you can get information about what has caused the problem by pressing and holding the reset button for 3 seconds.

The number of flashes below is repeated with a pause in between.

2 flashes	No flame signal when safety time expires
4 flashes	False light during start
7 flashes	3 x Losses of flame during operation
8 flashes	Time-out for preheater *
10 flashes	Incorrect wiring, internal fault or simultaneous occurrence of two faults

* In order for this fault code to occur, the preheater shall not reach its cut-off temperature within 10 mins. from switch on.

To return to normal operation: Press the reset button for 1 second.

If the reset button is instead kept pressed a second time for at least 3 seconds, you can, via an interface, obtain the corresponding information on a computer or flue gas analyser.

To return to normal operation: Press the reset button for 1 second

8. FAULT LOCATION

8.1 Burner will not start

Symptom	Causes	Remedies
Motor starts Burner pre-ventilates Flame formed Burner trips	Unstable flame Excess air Low oil pressure Incorrect combustion apparatus settings	Adjust the damper Check the oil pressure Check the nozzle in relation to the combustion apparatus dimensions and the ignition electrode position
Motor starts Burner pre-ventilates No flame formed Burner trips	Flame monitor does not register light Defective flame monitor Defective oil burner control	Check the flame monitor is clean and can register light Check with using new photocell Check using new oil burner control (Note: replacement of photocell recommended if oil burner control replaced)
	No oil False light	Check the oil supply to the burner and that there are no air bubbles in the pump Check function of solenoid
	No spark	Check flame monitor does not register ambient light Check high voltage wiring and ignition electrodes

8.2 Burner will not start after normal use

Burner does not start	Fuse blown Boiler thermostat has not reset	Check and replace fuse as necessary. Investigate cause of fault Adjust thermostat
Burner pre-ventilates	Overheating protection has deployed Defective preheater Defective oil burner control or flame monitor	Reset the overheating protection. Investigate the cause of its deploying. Remedy fault Check by replacing with new
Burner stops	No oil supply Too great a pressure drop at brake plate Too strong draught prevents flame forming No spark	Check that tank, oil lines, solenoid valves, pump and nozzle are in good condition Adjust the burner Correct the boiler draught Check the ignition transformer. Check the ignition electrode settings and ceramics

8.3 Delayed ignition, burner starts; pulsation

Burner pulsates at start with hot flue gases	Too strong a draught Too great a pressure drop at brake plate	Correct the boiler draught Adjust the burner
Burner pulsates at start	Nozzle partially blocked Oil pressure too low Flue blocked or damaged Fan wheel slipping on shaft	Replace nozzle Check and adjust Check and correct Check and tighten
	Pump coupling loose or worn Preheater clogged Delayed ignition Too strong a draught Too great a pressure drop at brake plate	Replace Check ignition electrode adjustment (refer to technical data) Check ignition electrodes not damaged Check high voltage wiring Check position of nozzle assembly adjustment Correct the boiler draught Adjust the burner

EU Declaration of conformity

CE

Bentone Oilburners

Type

BF 1	ST 133	B 10	B 55
ST 97	ST 146	B 30	B 65
ST 108	B 1	B 40	B 70
ST 120	B 2	B 45	B 80

This declaration of conformity is issued under the sole responsibility of the manufacturer. The object of the declaration described above is in conformity with:

Machinery Directive 2006/42/EC

EMC 2014/30/EU

Restriction of the use of certain hazardous substances (RoHS) Directive 2011/65/EU

References to the relevant harmonised standards used or references
to the other technical specifications in relation to which conformity is declared:

EN 267:2009+A 1 :2011 (excluded Annex J/K) Automatic forced draught burners for liquid fuels

Enertech AB
Box 309
S-341 26 LJUNGBY

Additional information can be downloaded at:

www.bentone.com

Ljungby September 26rd, 2017

Håkan Lennartsson

Managing Director

Enertech AB

10. OIL BURNERS MAINTENANCE INSTRUCTIONS

General information

Keep the boiler room clean. Ensure that the boiler room has permanent fresh air intake. Switch off before dismantling the oil burner.
At hinged mounting, make sure that an automatic safety switch is fitted, so that the burner cannot start when theswing door is open.
Don´t use the oil fired boiler to burn paper or rubbish,unless the boiler is especially fitted with a hinged door tomake this possible.
Don´t fill tank while burner is working.

Starting precautions

Make sure that the oil tank is not empty
Make sure that the valves on oil and water supply pipes areopen.
Make sure that the boiler flue damper is open.
Make sure that the boiler thermostat is set at the correct temperature.
Switch on the current. Most relay systems have a delayed action so that the burner will not start for perhaps 20 seconds.
With heavy oil the delay will be longer as the burner will notstart until the oil in the preheater reaches the requiredtemperature.

If the burner will not start

Press the reset button on the relay. Check that the thermostats are correctly adjusted.
Don´t forget the room thermostat, check that any fusesare intact and main switch is on.

If the burner starts but does not ignite

Make an attempt to start the burner.
Never make close repeated start attempts.
Don´t restart the burner until the boiler is free from oil gases.
If the burner still does not ignite send for the service engineer.

When switching off during summer

Always use the main switch to cut out the burner even when adjusting the burner or cutting off the heating for ashort time. For longer periods of shut down, close all valves and the oil supply stop-cock.
Clean the filter and nozzle by washing in petrol or paraffin.
Make sure the filter medium is not damaged or defective.
Protect electrical gear from damp.

Warning

Never stand too near or put your face to the inspection or fire door, when the burner is about to start.
Never use a naked flame to ignite oil if the electrical ignition fails.
Always wait for about 10 minutes for the unburnt gases to disperse before restarting the oil burner if it has failed to ignite previously.

Installed by:

……..

Tel:……..

Enertech AB. P.O Box 309, SE-341 26 Ljungby.
www.bentone.se, www.bentone.com

Bentone®
Enertech Group