178 072 66-4 P93783 2023-02-07

Installation- and maintenance instruction

B 55-2

LMO24.255C2E

RSA 95

Translation of the original instructions.

Bentone®

1

2

3

exempel example Beispiel

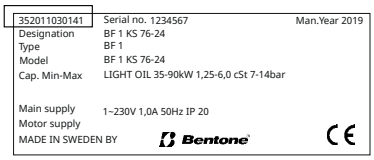

-sv

1. Manualer på övriga språk

2. www.bentone.com\ nedladdning eller scanna QR-koden.

3. Skriv in brännarens artikelnummer som finns på din typskylt (se bild) och välj ditt språk.

Detaljerad ecodesign information kan laddas ner på: www.bentone.com/ ecodesign.

-en

1. Manuals in other languages

2. www.bentone.com\download or scan QR-code.

3. Enter the burner`s article number on your data plate (see picture) and select language.

Detailed ecodesign information can be downloaded at: www.bentone.com/ecodesign.

-da

1. Manualer på andre sprog

2. www.bentone.com\ download eller scan QR-koden.

3. Indtast brænderens artikelnummer, der findes på typeskiltet (se billede), og vælg dit sprog.

Detaljerede oplysninger om ecodesign kan downloades på: www.bentone.com/ ecodesign.

-fr

1. Manuels dans d'autres langues

2. www.bentone.com\ download ou scannez le code QR.

3. Saisir le numéro d'article du brûleur sur votre plaque signalétique (consultez l'illustration) et sélectionnez la langue.

Des informations détaillées sur l'écodesign peuvent être téléchargées à l'adresse: www.bentone.com/ ecodesign.

-de

1. Gebrauchsanweisungen in anderen Sprachen

2. www.bentone.com\download oder scannen Sie den QR-Code.

3. Geben Sie die Artikelnummer des Brenners auf Ihrem Typenschild ein, (siehe Bild) und wählen Sie die Sprache aus.

Detaillierte Informationen zum Ecodesign können unter www.bentone.com/ecodesign heruntergeladen werden.

Table of contents

1. General Information ... 4
1.1 Delivery inspection ... 4
1.2 Safety ... 4

2. Technical data ... 6
2.1 Dimensions B 55-2 ... 6
2.2 Burner installation ... 6
2.3 Working field ... 7
2.4 Setting for nozzle assembly and air damper ... 7
2.6 Setting of ignition electrodes and brake plate ... 8
2.7 Nozzle and pump pressure ... 8
2.5 Technical specification ... 8
2.8 Nozzle table ... 9
2.9 Components ... 11

3. Electric equipment ... 12
3.1 Safety system ... 12
3.2 Wiring diagram ... 12
3.3 Function ... 13
3.4 Colour codes ... 14
3.5 Fault codes ... 14

4. Installation ... 15
4.1 General instructions ... 15
4.2 Inspection and maintenance ... 15
4.3 Start-up ... 15
4.4 Preparing for installation ... 15
4.5 Oil distribution ... 15
4.6 Electrical connection ... 16
4.7 Handling and lifting instruction ... 17

5. Mounting ... 18
5.1 Check oil line seals ... 18
5.2 Example of Basic settings ... 19
5.3 Settings Damper motor, 2-stage ... 20

6. Pump RSA 95/125 ... 21
6.1 Technical data ... 21
6.2 Components ... 21
6.3 Mounting/dismounting by-pass plug ... 21
6.4 Purging ... 21
6.5 Replacing the filter ... 21
6.6 Function ... 22
6.7 Suction line tables ... 23

7. Service ... 24
7.1 Burner Service Schedule, Oil ... 24
7.2 Component replacement intervals ... 24
7.3 Combustion device ... 25
7.4 Air damper ... 26
7.5 Replacement of damper motor, air ... 27
7.6 Fan ... 28
7.7 Replace oil pump ... 29
7.8 Tightness check of solenoid valves ... 30
7.9 Replacement of electrical components ... 31
7.10 Vibrations ... 32

8. Fault Location ... 33
8.1 Burner will not start ... 33
8.2 Burner will not start after normal use ... 33
8.3 Delayed ignition ... 34
8.4 Noise in pump ... 34
8.5 Pump pressure ... 35

9. Log of flue gas analysis ... 36

1. General Information

The burner may only be used for its intended purpose in accordance with the product's technical data.

We reserve the right to make design changes and cannot be held liable for any misprints or typographical errors.

Modifying the design or using accessories or components that have not been approved by Enertech in writing is strictly prohibited.

This Installation and Maintenance manual:

- is to be regarded as part of the burner and must always be kept near the installation site.
- must be read prior to installation.
- is intended for use by authorised personnel.

1.1 Delivery inspection

- Make sure everything is delivered and the goods have not been damaged during transit.
  Transport damage must be reported to the shipping company.
- If something is wrong with a delivery, report it to the supplier.

1.2 Safety

- before installation:

- Installation and work on the burner and associated system components may only be carried out by persons who have undergone relevant training.
- The product is packaged to prevent damage from occurring when handled – Handle the product with care! Lifting equipment must be used to lift larger packages.
- The products must be transported/stored on a level surface in a dry environment, max. 80% relative humidity, no condensation. Temperature -20 to +60 °C.

- installation:

- The burner must be installed in accordance with local regulations for fire safety, electrical safety, and fuel distribution.
- The premises must comply with local regulations pertaining to use of the burner, and must have adequate air supply.
- The installation site must be free of chemicals.
- Fire extinguisher with Class BE recommended.
- Make sure when installing the burner that there is enough space to service the burner.
- The electrical installation must be professionally carried out in accordance with current mains electricity regulations and in a professional manner.
- Make sure that the burner is suitable for the application (see Technical Data).
- All components must be installed without being bent, twisted or subjected to mechanical or thermal forces that affect components.

- Care must be taken by the installer to ensure that no electrical cables or fuel lines are pinched or otherwise damaged during installation or service.
- Flame tubes, fan wheels and air dampers, for example, may contain sharp edges.

- before first start:

- The burner must not be put into operation without proper safety and protection devices.
- Permitted ambient temperature during operation -10 to +60 °C. Max. 80% relative humidity, no condensation.
- The surface temperature of the burner's components may exceed 60 °C.
- Handle with caution – the burner has moving parts, and there is risk of crushing injuries.
- Seal inspections must be performed during installation and servicing to prevent leakage.
- fitting and installation work has been completed and approved.
- electrical installation has been correctly performed.
- flue gas ducts and combustion air ducts are not blocked.
- all actuators and control and safety devices are in working order and correctly set.
- If the boiler is equipped with an access hatch, this must be equipped with a hatch opening switch connected to the burner's safety system.
- When in operation, the burner's noise level can exceed 85 dBA – use hearing protection!

- Operation:

- Carry out all stipulated settings, service and inspection work within the set time.
- If the oil burner control has a solid red light, contact your installer.

2. Technical data

The burner is intended for:

- Operation in installations according to EN 303 and EN 267.
  When operating with a hot air boiler, the LMO24.255 or LMO44.255 control unit must be used.

Fuels:

- Fuel oil according to DIN 51603-1.
- Fuel oil A Bio 10 according to DIN 51603-6.

2.1 Dimensions B 55-2

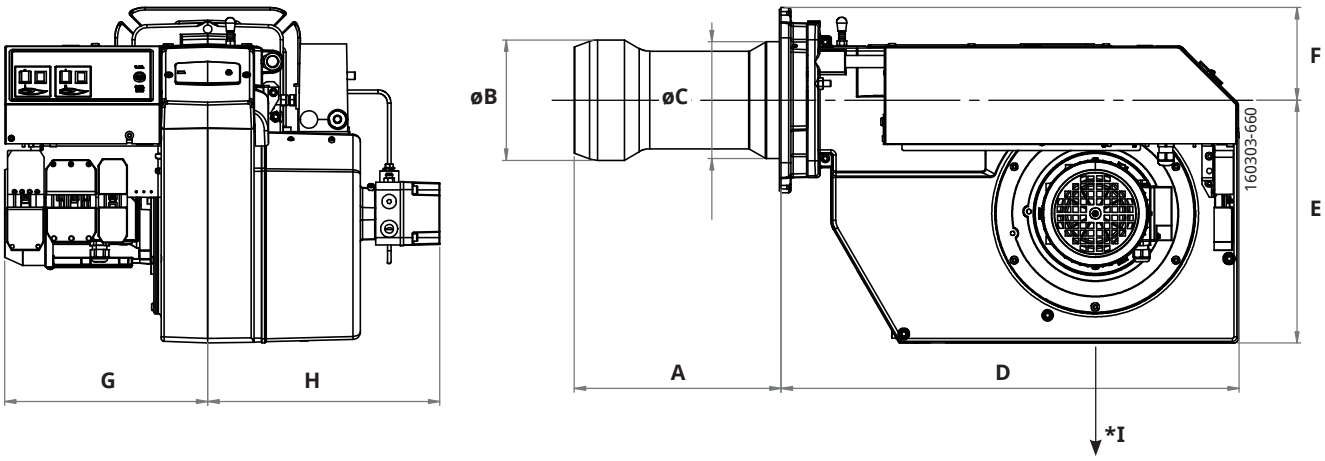

A	Ø B	Ø C	D	E	F	G	H	*I
274/374/474	159	155	606	321	123	269	307	200

* Min. recommended distance to floor.

2.2 Burner installation

2.2.1 Hole patten

Make sure the hole pattern on the boiler is designed for burner flange.

d_1	d_2	d_3
ø (155) 165	14	ø (226) 254-300

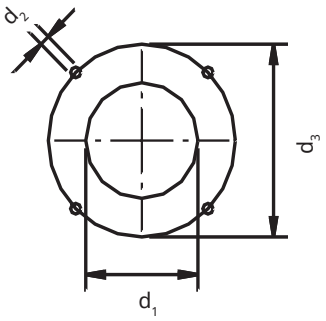

165 205 32-3

2.3 Working field

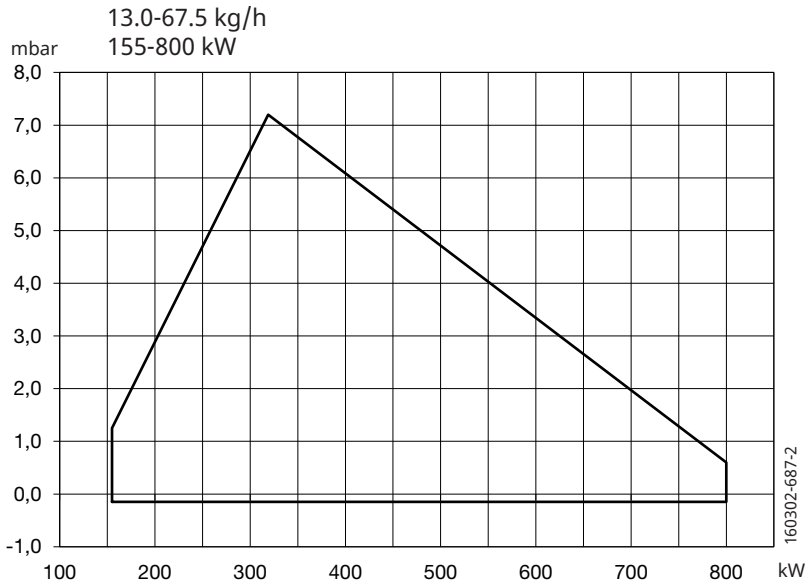

! Do not exceed working field.

2.4 Setting for nozzle assembly and air damper

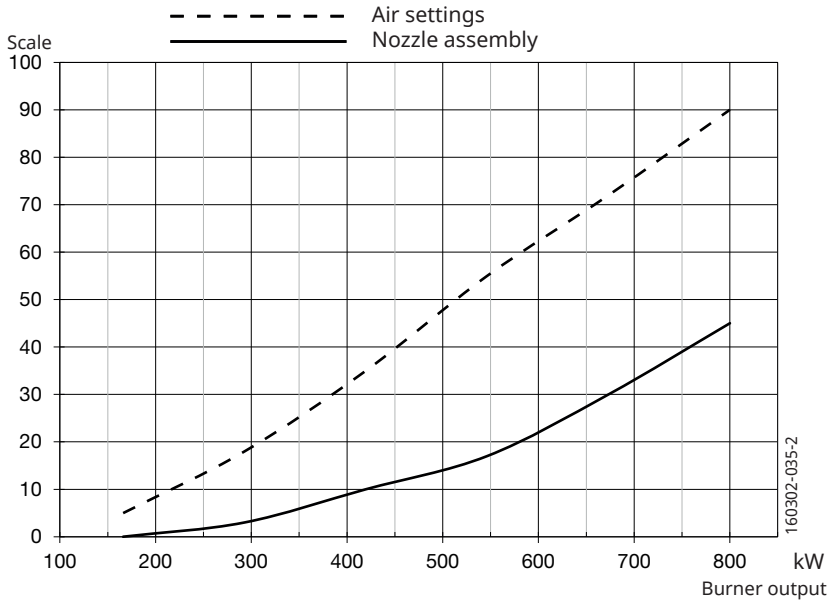

2.5 Technical specification

	B 55-2
Main supply, Operating [1)]	230V, 1~, 1.2A, 50Hz, IP20
Main supply, Motor	230/400V, 3.1/1.8A
Max fuse rating	6.3A
NO_x-class	3
Noise level	90dBA

[1)] Motor excluded.

Measurements according to EN 15036-1:2006

Alt.1 The noise level of the burner can be reduced by equipping the burner with silencer. Installation must be done so it does not prevent air supply to the burner.

Alt.2 The burner's noise level can be reduced by connecting the burner's air intake to the air duct that opens into an appropriate location. Installation must be done so it does not prevent air supply to the burner.

2.6 Setting of ignition electrodes and brake plate

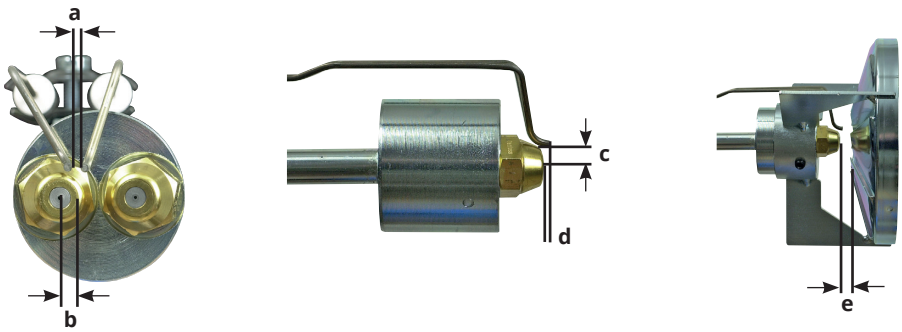

a	b	c	d	e
2.5-3.0	2.0	6.5-7.0	2.0	6.0-7.0

! *NB It is important that the spark does not strike against the brake plate or nozzle.

2.7 Nozzle and pump pressure

Due to different furnace geometries and capacities, it is not possible to recommend a nozzle model.

Nozzle:	45° Solid/semisolid
	60° Solid/semisolid
	80° Solid/semisolid
Pump pressure:	14 bar (14-21 bar) depending on pump model

2.8 Nozzle table

Pump pressure bar	14			15			16			17		
Gph	kg/h	kW	Mcal/h	kg/h	kW	Mcal/h	kg/h	kW	Mcal/h	kg/h	kW	Mcal/h
1,00	4,40	52	45	4,56	54	46	4,71	56	48	4,85	57	49
1,10	4,84	57	49	5,01	59	51	5,18	61	53	5,34	63	54
1,20	5,29	63	54	5,47	65	56	5,65	67	58	5,82	69	59
1,25	5,51	65	56	5,70	68	58	5,89	70	60	6,07	72	62
1,35	5,95	70	61	6,15	73	63	6,36	75	65	6,55	78	67
1,50	6,60	78	67	6,83	81	70	7,06	84	72	7,27	86	74
1,65	7,27	86	74	7,52	89	77	7,77	92	79	8,01	95	82
1,75	7,71	91	79	7,97	95	81	8,24	98	84	8,49	101	87
2,00	8,81	104	90	9,12	108	93	9,42	112	96	9,71	115	99
2,25	9,91	118	101	10,26	122	105	10,60	126	108	10,92	130	111
2,50	11,01	131	112	11,39	135	116	11,77	140	120	12,13	144	124
2,75	12,11	144	123	12,53	149	128	12,95	154	132	13,35	158	136
3,00	13,21	157	135	13,67	162	139	14,13	168	144	14,56	173	148
3,50	15,42	183	157	15,95	189	163	16,49	196	168	16,99	201	173
4,00	17,62	209	180	18,23	216	186	18,84	223	192	19,42	230	198
4,50	19,82	235	202	20,51	243	209	21,20	251	216	21,84	259	223
5,00	22,03	261	225	22,79	270	232	23,55	279	240	24,27	288	247
5,50	24,23	287	247	25,07	297	256	25,91	307	264	26,70	317	272
6,00	26,43	313	270	27,49	326	280	28,27	335	288	29,13	345	297
6,50	28,63	340	292	29,63	351	302	30,62	363	312	31,55	374	322
7,00	30,84	366	314	31,91	378	325	32,98	391	336	33,98	403	374
7,50	33,04	392	337	34,19	405	349	35,33	419	360	36,41	432	371
8,00	35,25	418	359	36,47	433	372	37,69	447	384	38,80	460	396
8,50	37,45	444	382	38,74	459	395	40,04	475	408	41,26	489	421
9,00	39,65	470	404	41,02	486	418	42,40	503	432	43,69	518	446
9,50	41,85	496	427	43,30	514	442	44,75	531	456	46,11	547	470
10,00	44,06	523	449	45,58	541	465	47,11	559	480	47,11	559	480
11,00	48,46	575	494	50,14	595	511	51,82	615	528	53,40	633	545
12,00	52,87	627	539	54,70	648	558	56,53	670	576	58,25	691	594
14,00	62,68	732	629	63,81	757	651	65,95	778	669	67,96	806	693
16,00	70,49	836	719	72,93	865	744	75,38	894	769	77,67	921	792
18,00	79,30	940	809	82,05	973	837	84,80	1006	865	87,38	1036	891
20,00	88,11	1045	899	91,17	1081	930	94,22	1117	961	97,09	1151	990
22,00	96,92	1149	988	100	1189	1023	104	1229	1057	107	1267	1089
24,00	106	1254	1078	109	1297	1116	113	1341	1153	116	1382	1188
26,00	115	1359	1168	119	1406	1209	122	1453	1249	126	1497	1287

The table applies to oil with a viscosity of 4.4 mm^2/s (cSt) at a density of 830 kg/m^3.

Pump pressure bar	18			19			20			21		
Gph	kg/h	kW	Mcal/h	kg/h	kW	Mcal/h	kg/h	kW	Mcal/h	kg/h	kW	Mcal/h
1,00	4,99	59	51	5,13	61	52	5,26	62	54	5,40	64	55
1,10	5,49	65	56	5,64	67	57	5,79	69	59	5,93	70	60
1,20	5,99	71	61	6,16	73	63	6,32	75	64	6,47	77	66
1,25	6,24	74	64	6,41	76	65	6,58	78,	67	6,74	80	69
1,35	6,74	80	69	6,93	82	71	7,11	84	72	7,28	86	74
1,50	7,48	89	76	7,69	91	78	7,89	93	80	8,08	96	82
1,65	8,24	98	84	8,47	100	86	8,69	103	89	8,90	105	91
1,75	8,78	104	90	8,98	106	92	9,21	109	94	9,44	112	96
2,00	9,99	118	102	10,26	122	105	10,53	125	107	10,79	128	110
2,25	11,24	133	115	11,55	137	118	11,85	140	121	12,14	144	124
2,50	12,48	148	127	12,83	152	131	13,16	156	134	13,49	160	138
2,75	13,73	163	140	14,11	167	144	14,48	171	148	14,84	176	151
3,00	14,98	178	153	15,39	182	157	15,79	187	161	16,18	192	165
3,50	17,48	207	178	17,96	213	183	18,43	218	188	18,89	224	193
4,00	19,98	237	204	20,53	243	209	21,06	250	215	21,59	256	220
4,50	22,47	266	229	23,09	274	235	23,69	281	242	24,28	288	248
5,00	24,97	296	255	25,65	304	262	26,33	312	268	26,98	320	275
5,50	27,47	326	280	28,22	335	288	28,96	343	295	29,68	352	303
6,00	29,97	355	306	30,79	365	314	31,59	374	322	32,38	384	330
6,50	32,46	385	331	33,35	395	340	34,22	406	349	35,07	416	358
7,00	34,96	415	356	35,92	426	366	36,86	437	376	37,77	448	385
7,50	37,46	444	382	38,49	456	392	39,49	468	403	40,47	480	413
8,00	39,96	474	407	41,05	487	419	42,12	499	429	43,17	512	440
8,50	42,45	503	433	43,62	517	445	44,75	531	456	45,87	544	468
9,00	44,95	533	458	46,18	548	471	47,39	562	483	48,57	576	495
9,50	47,45	563	484	48,75	578	497	50,02	593	510	51,26	608	523
10,00	49,94	592	509	51,32	609	523	52,66	624	537	53,96	640	550
11,00	54,94	652	560	56,45	669	576	57,92	687	591	59,36	704	605
12,00	59,93	711	611	61,58	730	628	63,19	749	644	64,76	768	660
14,00	69,92	829	713	71,84	852	733	73,72	874	752	75,55	896	770
16,00	79,91	948	815	82,11	974	837	84,25	999	859	86,34	1024	880

The table applies to oil with a viscosity of 4.4 mm^2/s (cSt) at a density of 830 kg/m^3.

2.9 Components

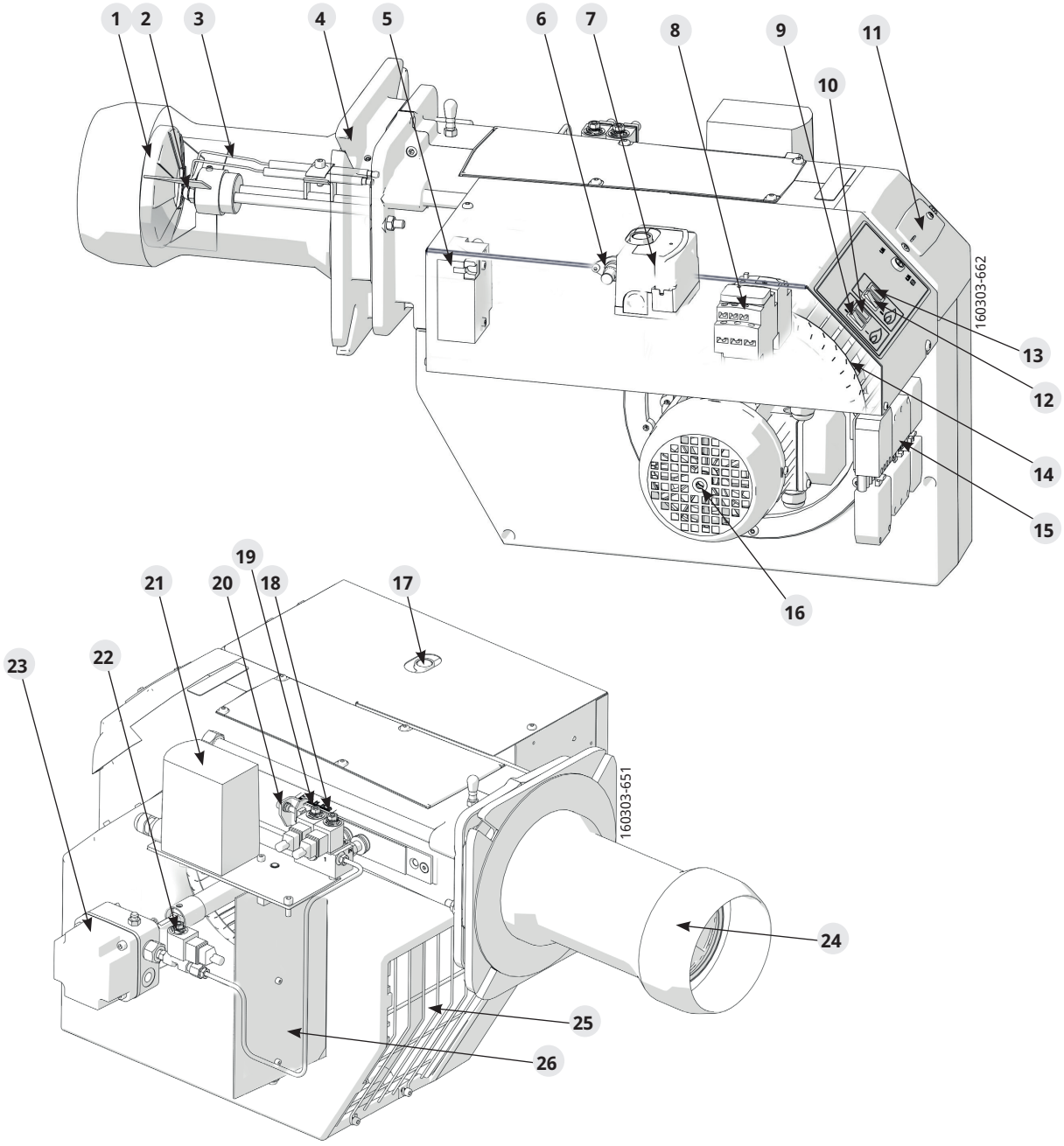

1.	Brake plate	9.	Switch I-0	18.	Solenoid valve, Stage 1
2.	Nozzle	10.	Indicator lamp, Stage 1	19.	Solenoid valve, Stage 2
3.	Ignition electrodes	11.	Cover, inspection glass	20.	Nozzle assembly adjustment
4.	Fixing flange	12.	Switch I-II	21.	Damper motor
5.	Ignition transformer	13.	Indicator lamp, Stage 2	22.	Safety valve
6.	Flame detector	14.	Fan wheel	23.	Pump
7.	Control box	15.	Electrical connection	24.	Flame tube
8.	Contactor/Thermal overload protection	16.	Motor	25.	Air intake
		17.	Reset button	26.	Air damper

3. Electric equipment

3.1 Safety system

The safety system (safety switch for hatches, doors, water level, pressure, temperature and other safety devices) must be installed in the safety circuit in accordance with current regulations for the system.

The cables of the safety system must be separated so that the outgoing signal is not placed in the same cable as the incoming signal.

3.2 Wiring diagram

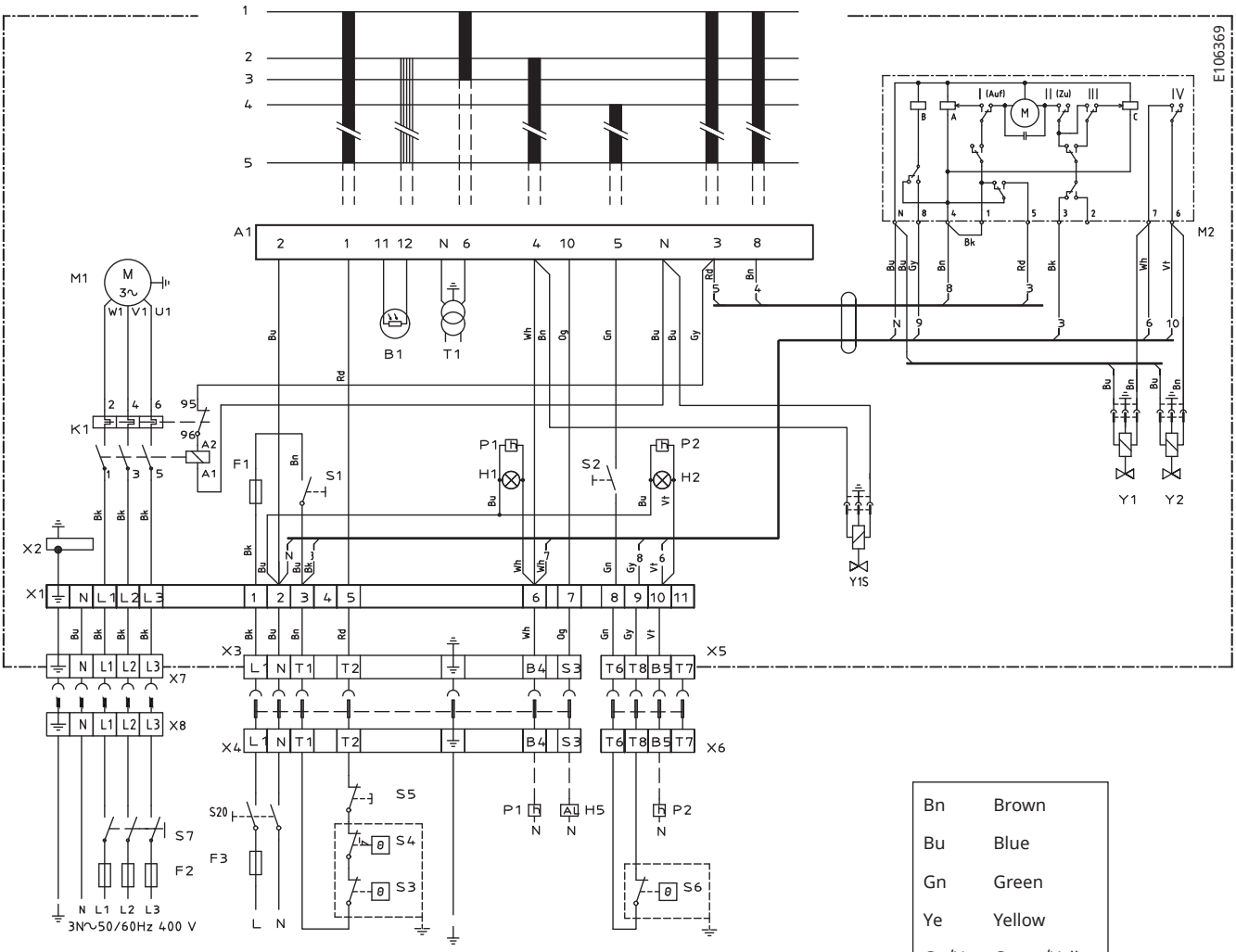

Bn	Brown
Bu	Blue
Gn	Green
Ye	Yellow
Gn/Ye	Green/Yellow
Bk	Black
Gy	Grey
Rd	Red
Wh	White
Og	Orange
Vt	Violet

165 405 53

3.2.1 Components

A1	Oil burner control	S1	Operating switch	X3	Plug-in contact ”Euro”, burner
B1	Flame detector	S2	Switch, High/Low load	X4	Plug-in contact ”Euro”, boiler
F1	Operating fuse	S3	Regulating thermostat	X5	Plug-in contact ”Euro”, High/Low load, burner
F2	Operating fuse	S4	Temperature limiter	X6	Plug-in contact ”Euro”, High/Low load, boiler
H1	Lamp, Low load	S5	Safety switch for hinged door	X7	Plug-in contact ”Euro” 3-phase, burner
H2	Lamp, High load	S6	Regulating thermostat, High/Low load	X8	Plug-in contact ”Euro”, 3-phase, boiler
H5	Lamp, lock-out signal 230V	S7	Main switch 3-phase	Y1	Solenoid valve 1
K1	Thermal overload protection	S20	Main switch, Operation	Y2	Solenoid valve 2
M1	Motor	T1	Ignition transformer	Y1S	Safety valve
M2	Damper motor	X1	Connection terminal board		
P1	Timer, total operating time	X2	Earth terminal		
P2	Timer, High load				

3.3 Function

1 **Switch on operating switch and twin thermostat**

A spark is formed. The air damper motor opens the damper to low load position. The burner motor starts, the prepurge goes on till the prepurge period expires and the solenoid valve 1 opens (2).

2. **Solenoid valve 1 opens**

Oil mist is formed and ignited. The photocell indicates a flame. The ignition spark goes out after flame indication (See Technical data oil burner control).

3. **The safety time expires**

a If no flame is established before this time limit the control cuts out.

b If for some reasons the flame disappears after this time limit, the burner will make an attempt to re-start.

4 **High/Low thermostat ON**

The burner is in operating position and can now change between full load and low load.

4-5 **Operating position**

If the burner operation is interrupted by means of the main switch or the thermostat, a new start takes place when the conditions in accordance with point 1 are fulfilled.

The oil burner control cuts out

A red lamp in the control is lit. Press the reset button and the burner re-starts.

! Mains connection and fuse in accordance with local regulations.

3.3.1 Technical data

	LMO14.113...	LMO24.255...
Preiginition time	15 s	25 s
Prepurge time	16 s	26 s
Postignition time	3 s	5 s
Safety lockout time	< 10 s	< 5 s
Reset time after lockout	< 1 s	< 1 s
Reaction time on flame failure	< 1 s	< 1 s
Ambient temperature	-5 - +60°C	-20 - +60°C
Min detector current required (with flame)	45 µA dc	45 µA dc
Max perm. detector current (without flame)	5.5 µA dc	5.5 µA dc

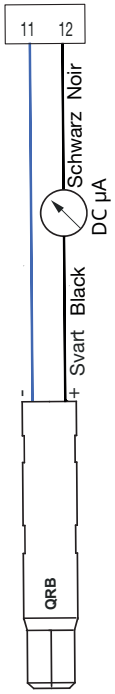

160303-333

3.4 Colour codes

When the burner starts, three signal lights in the reset switch indicate the normal sequence, as well as provide indication if something abnormal is happening in accordance with the following table:

Preheater in operation	Solid yellow
Ignition switched on	Flashing yellow
Normal operation	Solid green
Operation, poor flame signal	Flashing green
Undervoltage	Flashing yellow-red
Fault, alarm	Solid red
False light	Flashing red-green
Communication mode	Fluttering red

3.5 Fault codes

When the red light for a blocked relay box comes on, you can get information about what has caused the problem by pressing and holding the reset button for 3 seconds.

The number of flashes below is repeated with a pause in between.

2 flashes	No flame signal when safety time expires
4 flashes	False light during start
7 flashes	3 x Losses of flame during operation
8 flashes	Time-out for preheater *
10 flashes	Incorrect wiring, internal fault or simultaneous occurrence of two faults

* In order for this fault code to occur, the preheater shall not reach its cut-off temperature within 10 mins. from switch on.

To return to normal operation: Press the reset button for 1 second.

If the reset button is instead kept pressed a second time for at least 3 seconds, you can, via an interface, obtain the corresponding information on a computer or flue gas analyser.

To return to normal operation: Press the reset button for 1 second.

4. Installation

4.1 General instructions

Oil burners must be installed in accordance with local regulations. The installer must therefore be knowledgeable of the regulations pertaining to oil and combustion.

Only oil suitable for the burner must be used and then in combination with a suitable oil filter installed before the burner's oil pump.

If the burner is replacing an existing burner, ensure that the oil filter is replaced or cleaned. Installation may only be performed by qualified personnel.

Care should be taken by the installer to ensure that electrical cables and oil lines are not pinched or otherwise damaged during installation or servicing.

4.2 Inspection and maintenance

The system must be maintained at the interval specified in the service schedule. If the burner is in a dirty environment, service should be done at more frequent intervals.

4.3 Start-up

In order to obtain the correct setting, a flue gas analysis and temperature measurement must be carried out. Otherwise, there is a risk of soot build up, poor efficiency or condensation in the chimney. The system must be fine-tuned at start-up. The temperature in the chimney at a depth of 0.5 m must be at least 60 °C to prevent condensation.

4.4 Preparing for installation

Check that the burner's dimensions and capacity range are suitable for the relevant boiler. The power data on the rating plate refers to the burner's minimum and maximum power.

4.5 Oil distribution

In order to achieve good reliability, it is important that the oil distribution system is designed correctly.

Take the following into account:

- Selection of pipe diameter, pipe length and height difference; see Pump instruction.
- Pipelines are to be laid with the fewest possible number of glands.
- The pipes are to be laid so that the oil supply hoses are not subjected to tensile stresses or become excessively bent when the burner is swung out or removed for servicing.
- The oil filter should be installed so that the filter cartridge can easily be replaced or cleaned.
- Parts in contact with oil must be selected in materials that are capable of withstanding the medium's physical properties.
- When installing oil hoses, check that the inlet and return hoses are fitted to the appropriate connection on the oil pump. The hoses must be located so that they do not bend or become subject to tensile load.
- Bleed the oil system. The oil pump/oil preheater may be damaged if run dry. The vacuum in the suction line should not fall below 0.3 bar during start-up.

! The oil filter must be installed before the burner's oil pump.

! Be sure to fill the burner oil system before starting it for the first time.

165 205 19-3

4.6 Electrical connection

- Before work on the electrical connection, the current must be disconnected so that the installation is isolated.
- Electrical connection must be done in accordance with the applicable regulations.
- Burners must be connected to an all-pole switch.
- Connection must conform to the wiring diagram.
- Use appropriately sized fuses.

! If any electrical connection is used other than that recommended by Enertech, there may be a risk of damage to property and personal injury.

4.7 Handling and lifting instruction

The lifting aid we used here are available as spare parts.

165 205 33-2

5. Mounting

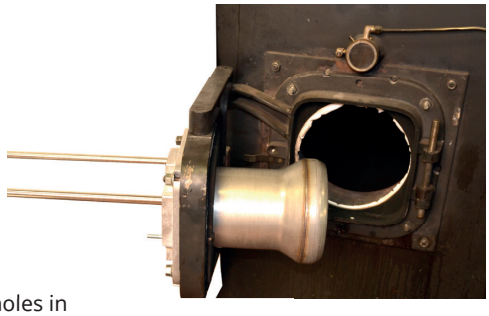

1. Remove fan housing from fixing flange.
2. Remove the brake plate from the oil line.
3. Install the selected nozzles, (see Technical data).
4. Install the brake plate on the oil line.
5. Remove flame tube from fixing flange.
6. Install fixing flange with gasket on boiler.
7. Install the flame tube on the fixing flange. Make sure that the holes in the front edge of the flame tube are pointing down (not on all flame tubes), allows any drops of oil to run out.

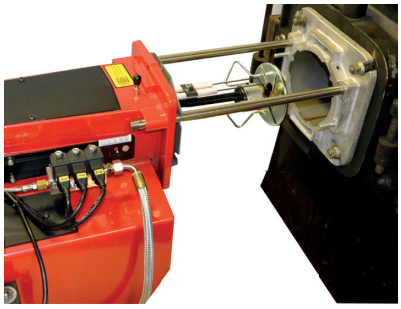

! **If the burner tube must be installed from the inside of the boiler, this means that the boiler must be opened or have a spectacle flange that is designed so that it can be reconnected with the burner tube mounted.**

8. Insulate between burner and boiler door to reduce radiated heat.
9. Install fan housing on fixing flange and lock with nuts.
10. Connect oil lines to the pump.
11. Connect the burner electrically.

5.1 Check oil line seals

When the burner has been installed and put into operation, the tightness of the various coupling elements should be checked, in case of leakage - tighten the coupling elements.

! Use Loctite 5188 on threaded oil lines.

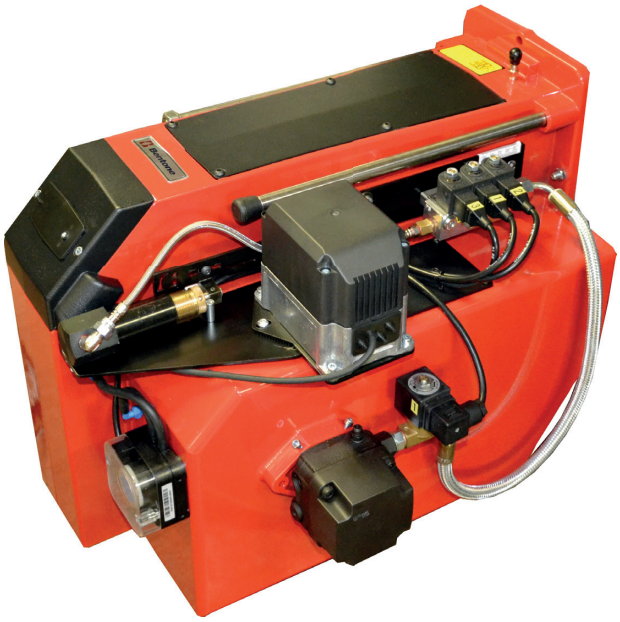

165 105 51-2 2022-03-31

5.2 Example of Basic settings

Basic settings should only be seen as setting values to get burner to start. Once the burner has started and established flame, it is necessary to adjust the settings so that they are adapted to the installation and the fuel used.

B 55-2

Burner output:	627 kW		
Estimated nozzle output:	627 / 11.86*	=	52.9 kg/h

(* Calorfic value Fuel oil = 11.86 kWh/kg)

This provides the following nozzle according to the nozzle table, (see Technical data).

627 kW distributed over 2 nozzles:		
Nozzle Stage 1:	7.00 Gph	392 kW
Nozzle Stage 2:	4.50 Gph	235 kW
Pump pressure:	14.0 bar	

Setting values for 627 kW according to basic setting diagram, (see Technical data).

Insert	Stage 2	=	25
Air	Stage 1	=	32
Fuel, Stage 2	Solenoid valve 2	=	48
Air	Stage 2	=	65

Selection of output and connection between the different power stages must be selected and adjusted so that the system achieves good functionality.

5.3 Settings Damper motor, 2-stage

Air adjustment

The damper motor rotates the air damper between three preset positions: completely closed, low load and high load. These positions are controlled in the motor by colored cam discs, the black cam disc controls the switching on/off of the solenoid valve. Adjust the amount of air by changing the position of the cam discs.

Blue cam disc is the limit position for closed air dampers and does not normally need to be changed.

Low load

- Set control switch for load position to position II (high load).
- Turn orange cam disc to 0° to reduce airflow and to 90° to increase airflow.
- Return the control switch to position I (low load) and check the combustion values.

High load

- Set control switch for load position to position I (low load).
- Turn red cam disc to 0° to reduce airflow and to 90° to increase airflow.
- Place black cam disc in a position between red and orange cam discs and adjust to obtain a good load change.
- Return the control switch to position II (high load) and check the combustion values.

Release

By pressing the button, the motor is disengaged and the air damper can be turned. The function is used when servicing air dampers.

Recommended excess air

Excess air flue gases		Max % CO_2
% O_2	% CO_2 Lambda 1.2	
3 - 5	≈12.5	15.4

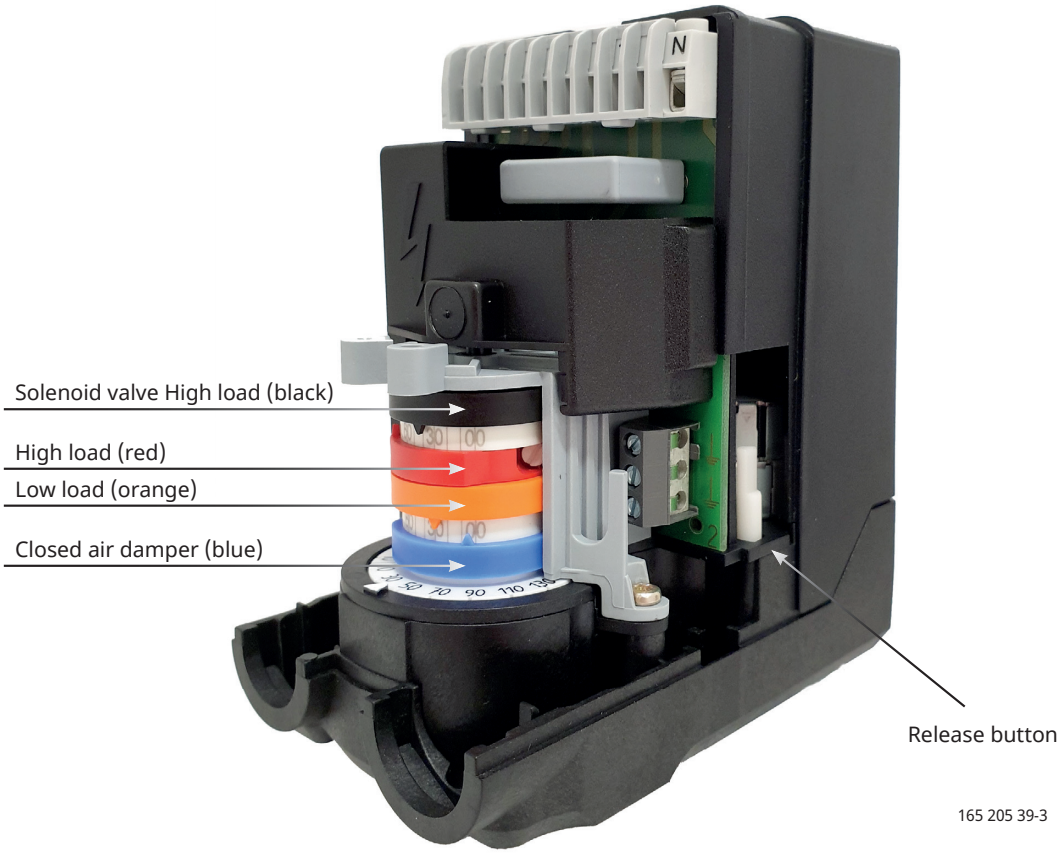

165 205 39-3 2022-10-27

6. Pump RSA 95/125

6.1 Technical data

	RSA 95	RSA 125
Viscosity range::	1,3-18,0 mm^2/s	1,3-18,0 mm^2/s
Pressure range at viscosity 1,3-1,8:	5,5-12,0 bar	5,5-12,0 bar
Pressure range at viscosity 1,8-18,0:	2,5-21,0 bar	2,5-21,0 bar
Oil temperature:	-10 till+70°C	-10 till+70°C
Nozzle capacity at viscosity 4,3:	150-190 l/h	215-260 l/h
Gear capacity:	225 l/h	294 l/h
Max pressure on the suction and return side:	4 bar	4 bar

6.2 Components

1. Pressure gauge port G 1/8”
2. Nozzle outlet G 1/4”
3. Suction line G 1/4”
4. Suction line G 1/4”
5. Return line G 1/4”
6. Return line G 1/4”
7. Return plug
8. Pressure regulation 4 mm Allen key

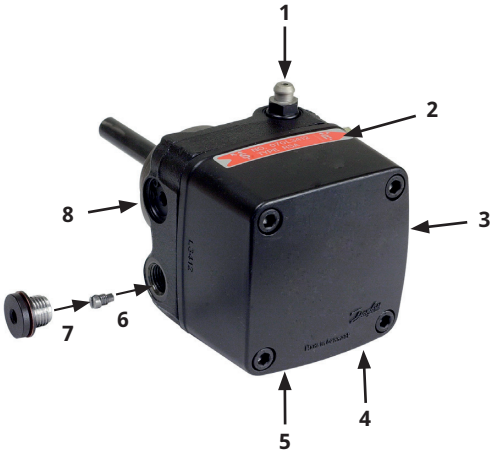

6.3 Mounting/dismounting by-pass plug

In a 2-pipe-system excess oil is led back direct to the oil tank. In a 1-pipe-system the by-pass plug must be removed so that there is a free passage back to the suction side through the return line with the return port closed.(Pos.7).

6.4 Purging

On 1-pipe systems it is necessary to purge the pump. On 2-pipe systems purging is automatic through the return line.

6.5 Replacing the filter

Replace the oil fiter on the oil pump as follows..

- Close the oil valves.
- Unscrew the cover (4 x 5 mm Allen screws).
- Replace the oil filter.
- Replace the cover gasket.
- Refit the cover.
- Open the oil valves.

165 105 54

6.6 Function

When the pump is started oil is drawn through the suction port ”S” via filter ”H” to the suction side of the gearwheel set ”C”. From here the gearwheel set pumps the oil to the pressure side and at the same time the oil becomes pressurized. The oil is led to cut-off and regulating valve ”V” which opens when the set pressure is reached.

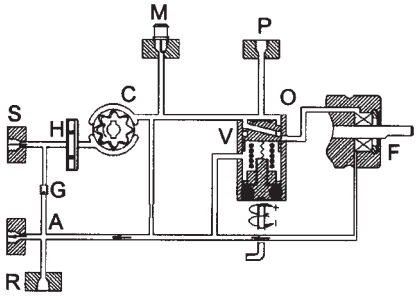

The pressure is controlled and kept constant by regulating valve ”V”. At the same time the gearwheel set ”C” distributes the oil through nozzle port ”P” and pump return side ”R” via the shaft seal ”F”.

The quantity of oil supplied to nozzle port ”P” is determined by the pressure set on regulating valve ”V” and the nozzle/resistance in the nozzle line.

In 2-pipe-systems excess oil is led back to the oil tank. In 1-pipe-systems the by-pass plug ”A” must be removed to give free flow back to the suction side via return line ”G” with return port ”R” closed.

When the pump is stopped, the pump output drops and produces a drop in the oil pressure. The spring in the regulating valve presses the regulating piston forward until it seals in port ”P”. This cuts off the oil flow to the nozzle and ensures that the nozzle line is effectively shut off.

If the pump is overloaded, i.e. more oil is demanded than the gearwheel is able to pump under the given conditions, the oil pressure falls below the set value because the piston of the regulating valve moves towards its closed position and partially or wholly cuts off the return oil via port ”O”.

This can be remedied by

- reducing the pump pressure
- reducing the capacity, i.e. smaller nozzle or greater resistance
- changing to a pump with higher capacity

Schematic diagram

1. Nozzle Stage 1
2. Nozzle Stage 2
3. Nozzle Stage 3
4. Solenoid valve Stage 1 (Y1)
5. Solenoid valve Stage 2 (Y2)
6. Solenoid valve Stage 3 (Y3)
7. Safety valve for nozzle (Y1S)
   Only for capacities over 100 kg/h or on special request by customer
8. Hydraulic control device
   Only on burners with hydraulic air control or nozzle assembly optimisation.
9. Oil pump

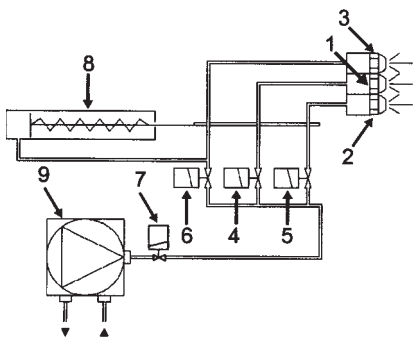

Items 3 and 6 are not fitted to two-stage burners. Item 8 is connected after solenoid valve nozzle 2 (Y2).

6.7 Suction line tables

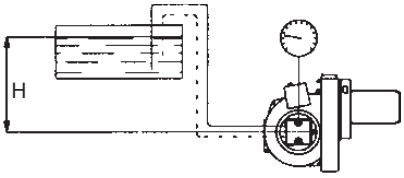

1-pipe system

Höjd H m	Pipe diameter ø12mm m	ø15mm m	ø20mm m

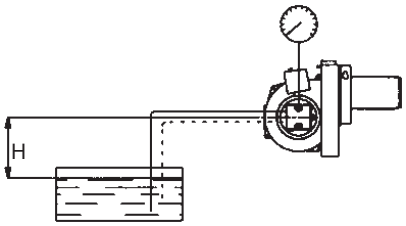

1-pipe system

Height H m	Pipe diameter ø12mm m	ø15mm m	ø20mm m

Two-pipe system			
Height	Pipe diameter		
H	ø12mm	ø15mm	ø20mm
m	m	m	m
4,0	81	100	100
3,5	76	100	100
3,0	71	100	100
2,5	66	100	100
2,0	61	100	100
1,5	56	100	100
1,0	51	100	100
0,5	46	100	100

With an underlying tank a 1-pipe-system is not recommended.

Two-pipe system			
Height	Pipe diameter		
H	ø12mm	ø15mm	ø20mm
m	m	m	m
0,0	41	100	100
-0,5	36	89	100
-1,0	31	77	100
-1,5	26	65	100
-2,0	22	53	100
-2,5	17	41	100
-3,0	12	29	91
-3,5	7	17	53
-4,0	2	5	15

The suction line tables consist of theoretically calculated values where the pipe dimensions and oil velocity have been matched so that turbulences will not occur. Such turbulences will result in increased pressure losses and in acoustic noise in the pipe system.

In addition to drawn copper piping a pipe system usually comprises 4 elbows, a non-return valve, a cut-off valve and an external oil filter.
The sum of these individual resistances is so insignificant that they can be disregarded.

The tables do not include any lengths exceeding 100 m as experience shows that longer lengths are not needed. The tables apply to a standard fuel oil of normal commercial quality according to current standards. On commissioning with an empty tube system the oil pump should not be run without oil for more than 5 min. (a condition is that the pump is being lubricated during operation).

The tables state the total suction line length in metres at a viscosity of 6,0 mm^2/s.

7. Service

Service and maintenance work may only be performed by qualified personnel. Perform operational check of all safety systems and components at each service. Only Enertech original parts should be used when replacing components.

! Use caution when operating the burner, surfaces may be hot.

7.1 Burner Service Schedule, Oil

Servicing must be carried out once a year or after 3,000 hours of operation.

Burner	1 year	3,000 h
Filter	1 year replacement	3,000 h replacement
Oil hose	1 year inspection/replacement	
Nozzle	1 year replacement	3,000 h replacement
Electrodes	Replacement/cleaning 1 year	Replacement/ceaning 3,000 h
Brake disc	Replacement/cleaning 1 year	Replacement/ceaning 3,000 h
Motor	1 year	3,000 h
Drive shaft	Check/replace in the event of damage	Check/replace in the event of damage
Fan wheel	“1 year Replace if need for cleaning/imbalance”	“3000 h Replace if need for cleaning/imbalance”
Oil filter	Once a year	3,000 h replacement
Oil valve	Tightness check once a year	Replace if leakage detected

7.2 Component replacement intervals

Components	**Service life – Recommended replacement**	**Service life – Recommended replacement Operating cycles**
Control system	10 years	250,000 cycles
Pressure switch	10 years	250,000 cycles
Ignition system with flame guard	10 years	250,000 cycles
UV flame sensor	10,000 h	N/A
Damper motor		500,000 cycles
Contactor	10 years	500,000 cycles

The burner and its components must be recycled according to applicable regulations.

7.3 Combustion device

1. Disconnect the main power and shut off the fuel supply.

! Before obtaining access to electrical and fuel line components all supply circuits must be disconnected.

2. Loosen nut (D) and pull out the fan housing from fixing flange.
3. Remove brake plate from the oil pipe.
4. Replace nozzle.
5. Clean or replace brake plate.
6. Fit brake plate (see Technical data for adjustment).
7. Check ignition electrodes, replace if necessary (see Technical data for adjustment).
8. Refit fan housing and fixing flange, lock with nut (D).
9. Open boiler/hinged flange to access the burner tube, remove and clean.
10. Install flame tube, be sure to install the drainage hole downwards (not available on all flame tubes) so that any oil spills can drain out.
11. Close boiler/hinged flange.
12. Switch on the main power and open the fuel supply.
13. Start burner and check/adjust combustion.

! Use caution when operating the burner, surfaces may be hot.

! NB: When soiled, always replace nozzles with new nozzles. Do not clean.

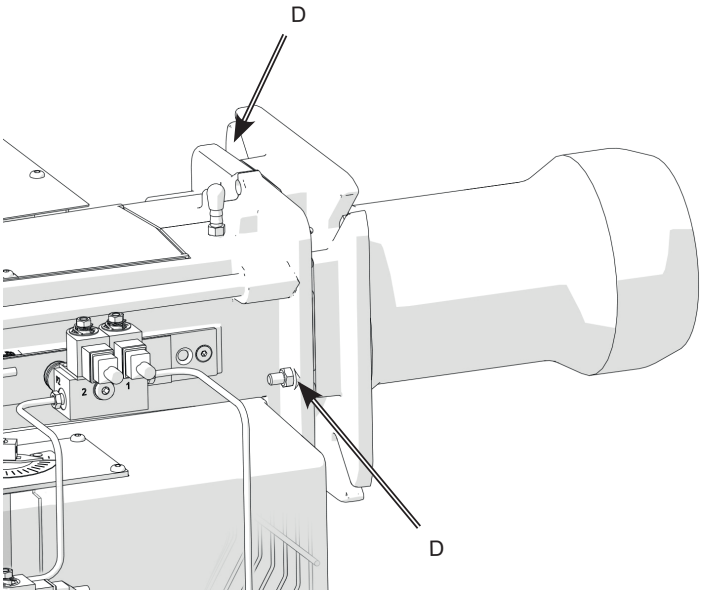

! When servicing/replacing components that affect combustion, flue gas analysis and soot test must be carried out following installation.

165 205 36-2

7.4 Air damper

1. Disconnect the main power and shut off the fuel supply.

> **!** Before obtaining access to electrical and fuel line components all supply circuits must be disconnected.

2. Undo the nuts (E) and pull out the burner body on its guides.
3. Remove the intake grille at the air intake.
4. Release the damper motor.
5. Clean the air damper (F) and air intake, lubricate the damper shaft if necessary.
6. Refit the damper motor.
7. Refit the intake grille.
8. Slide the burner together and secure it with the nuts (E).
9. Switch on the main power and open the fuel supply.
10. Start burner and check/adjust combustion.

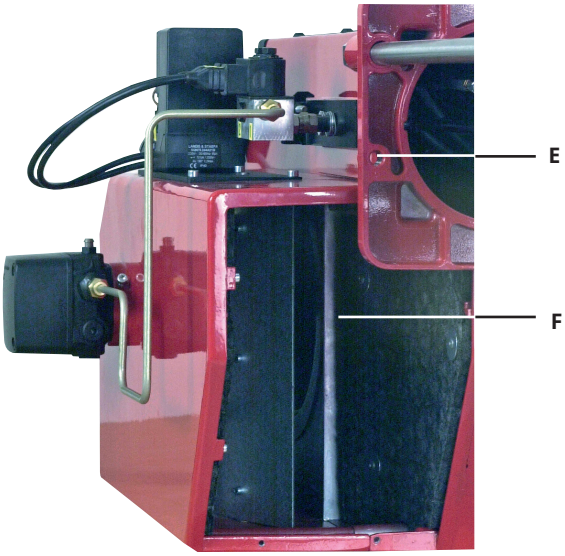

> **!** When servicing/replacing components that affect combustion, flue gas analysis and soot test must be carried out following installation.

7.5 Replacement of damper motor, air

1. Disconnect the main power and shut off the fuel supply.

> **!** Before obtaining access to electrical and fuel line components all supply circuits must be disconnected.

2. Note the connection position of the cables on the damper motor.
3. Disconnect cables from damper motor.
4. Release the damper motor.
5. Remove the screws (G) securing the damper motor mounting plate.
6. Turn the damper approx. 30°.
7. Lift up the damper motor.
8. Disconnect the link arm (H) from the motor shaft.
9. Remove the damper motor from the mounting plate (I).
10. Install the new damper motor on the mounting plate.
11. Connect the link arm to the damper motor shaft. It is important that the screw is at right angles to the plane of the shaft.
12. Release the damper motor and lock it at 30°.
13. Fit the mounting plate by guiding the link arm into the attachment point on the air damper and the air damper shaft into the mounting plate (make sure that the bushings are fitted between the mounting plate and damper shaft).
14. Release the damper motor and check that the damper moves freely. Close the damper and zero the graduated scale on the damper motor.
15. Make the electrical connections to the damper motor.
16. Reset the damper motor cams.
17. Switch on the main power and open the fuel supply.
18. Start burner and check/adjust combustion.

> **!** When resetting dampers, ensure that they do not engage in the close damper position. If dampers do engage, the automatic control unit will report an error message.

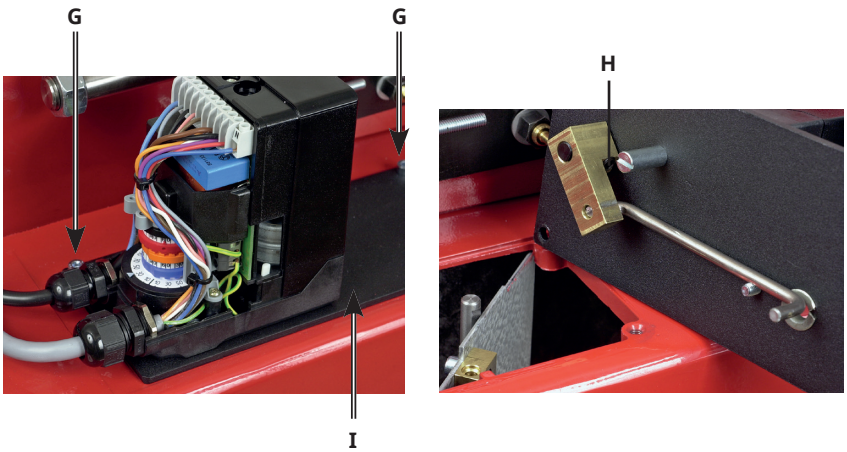

> **!** When servicing/replacing components that affect combustion, flue gas analysis and soot test must be carried out following installation.

165 405 56

7.6 Fan

1. Disconnect the main power and shut off the fuel supply.

> **!** **Before obtaining access to electrical and fuel line components all supply circuits must be disconnected.**

2. Detach the electrical panel (Y).
3. Loosen the motor electrical connection and screws (X) enough to turn and lift out the motor.
4. Check the fan wheel attachment and any skew, replace if damaged.
5. Clean or replace the fan wheel.
6. Refit the parts, making sure that the drive shaft is correctly connected at both ends.
7. Switch on the main power and open the fuel supply.
8. Start burner and check/adjust combustion.

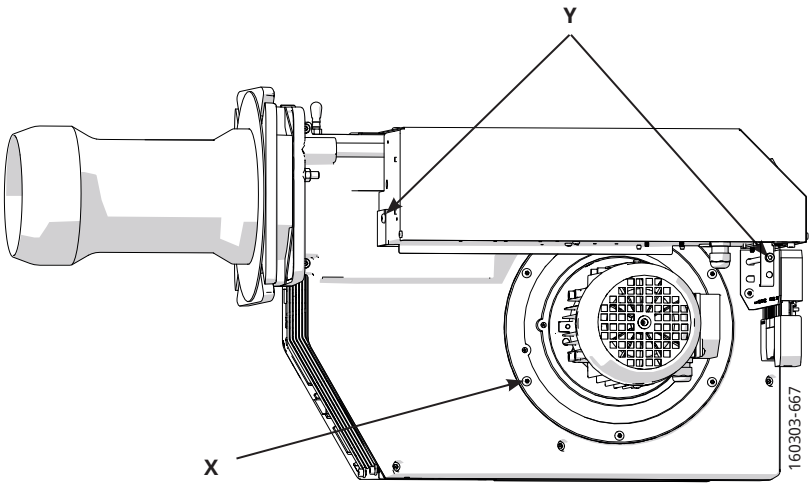

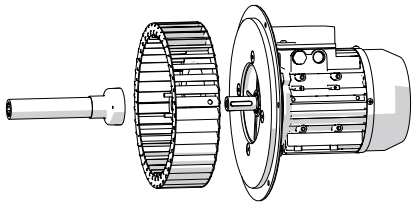

7.6.1 Replace drive shaft

1. Disconnect the main power and shut off the fuel supply.
2. Detach the electrical panel (Y).
3. Loosen the motor electrical connection and screws (X) enough to turn and lift out the motor.
4. Remove drive shaft and drive coupling from motor.
5. Replace drive shaft coupling on pump.
6. Refit coupling, pump and motor, making sure drive shaft is connected correctly at both ends.
7. Switch on the main power and open the fuel supply.

> **!** **When servicing/replacing components that affect combustion, flue gas analysis and soot test must be carried out following installation.**

165 405 77

7.7 Replace oil pump

1. Disconnect the main power and shut off the fuel supply.

! Before obtaining access to electrical and fuel line components all supply circuits must be disconnected.

2. Disconnect oil hoses from the pump.
3. Loosen screws (J) and pull out the oil pump.
4. Move/replace the pump coupling over to the new pump and set the same distance (K) between pump and pump coupling as before to avoid pressure on the pump packing box.
5. Install the oil pump on the burner and tighten the screws (J). It is important that the splines of the pump shaft are correctly inserted in the pump coupling.
6. Fit new oil hoses.
7. Switch on the main power and open the fuel supply.
8. Bleed the pump.
9. Start burner and check/adjust combustion.

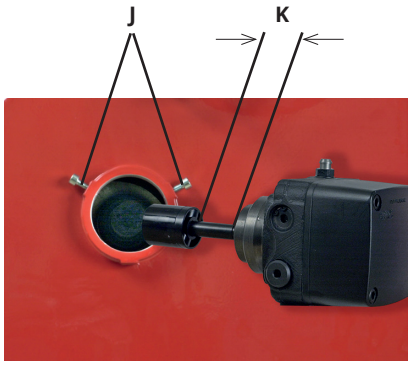

! Use caution when operating the burner, surfaces may be hot.

! When servicing oil bearing components, check the oil density when the burner is commissioned after servicing.

! When servicing/replacing components that affect combustion, flue gas analysis and soot test must be carried out following installation.

165 405 57

7.8 Tightness check of solenoid valves

7.8.1 Burners with single solenoid valve

- Disconnect the power supply to solenoid valves Y1, Y2 and Y3.
- Run motor and pump - check that no oil is coming out of the nozzle, replace solenoid valve if necessary.

7.8.2 Burner with safety solenoid valve Y1S

Check safety solenoid valve Y1S

- Disconnect power supply to safety solenoid valve Y1S.
- Provide power to solenoid valve Y1.
  On multi-stage burners, it is sufficient to power one valve.
- Run motor and pump - check that no oil is coming out of the nozzle, replace solenoid valve if necessary.

Check solenoid valves Y1, Y2 and Y3

- Disconnect the power supply to solenoid valves Y1, Y2 and Y3.
- Provide power to safety solenoid valve Y1S.
- Run motor and pump - check that no oil is coming out of the nozzle, replace solenoid valve if necessary.

! Use Loctite 5188 on threaded oil pipelines.

! When servicing/replacing components that affect combustion, flue gas analysis and soot test must be carried out following installation.

165 405 23

7.9 Replacement of electrical components

1. Disconnect the main power and switch off the fuel supply.

! Before obtaining access to terminals,
all supply circuits must be disconnected.

2. Note the connection of the existing component and disassemble.
3. Fit new component with same connection or with specified alternative connection.
4. Switch on the main power and check the operation of the new component.
5. Start burner and check/adjust combustion.

! When servicing/replacing components that affect combustion, flue gas analysis and soot test must be carried out following installation.

165 105 11-3

7.10 Vibrations

Maximum permitted vibration level is 5.0 mm/s.

- Check tightness of fasteners.
- Check fan wheel for damage and contamination (replace if necessary).
- Check motor shaft and bearings. If they are worn, replace the motor.

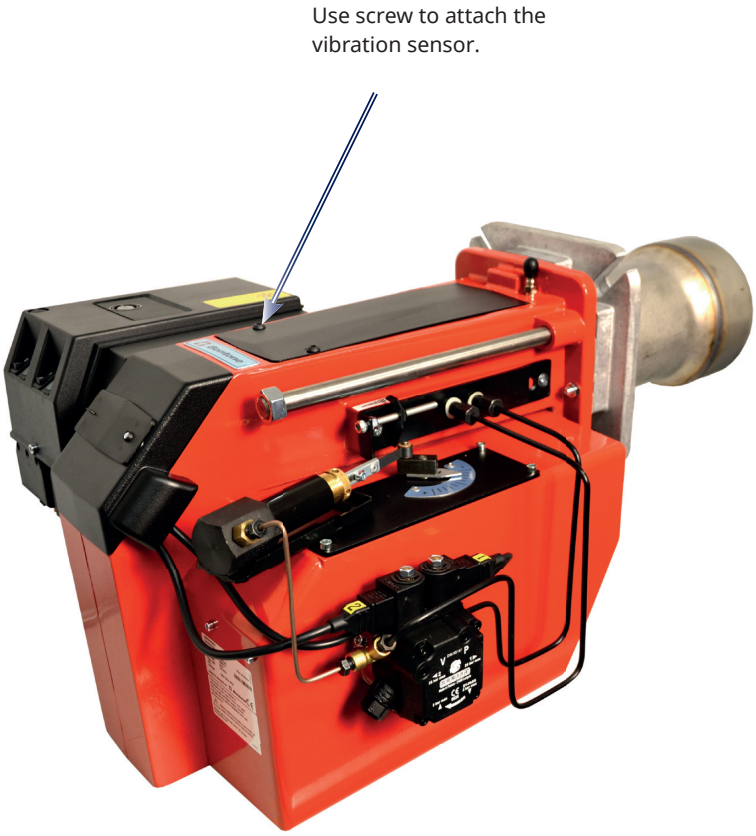

165 405 46

8. Fault Location

8.1 Burner will not start

Symptom	Causes	Remedies
Motor starts Burner pre-ventilates Flame formed Burner trips	Unstable flame Excess air Low oil pressure Incorrect combustion apparatus settings	Adjust the damper Check the oil pressure Check the nozzle in relation to the combustion apparatus dimensions and the ignition electrode position
Motor starts Burner pre-ventilates No flame formed Burner trips	Flame monitor does not register light Defective flame monitor Defective oil burner control	Check the flame monitor is clean and can register light Check with using new photocell Check using new oil burner control (Note: replacement of photocell recommended if oil burner control replaced)
	No oil	Check the oil supply to the burner and that there are no air bubbles in the pump
	False light	Check function of solenoid
	No spark	Check flame monitor does not register ambient light Check high voltage wiring and ignition electrodes
Motor does not start	Preheater does not get up to temperature.	Check preheater function

8.2 Burner will not start after normal use

Symptom	Causes	Remedies
Burner does not start	Fuse blown	Check and replace fuse as necessary. Investigate cause of fault
	Boiler thermostat has not reset	Adjust thermostat
	Preheater does not get up to temperature	Check preheater function
Burner pre-ventilates	Overheating protection has deployed	Reset the overheating protection. Investigate the cause of its deploying. Remedy fault
	Defective preheater Defective oil burner control or flame monitor	Check by replacing with new
Burner stops	No oil supply	Check that tank, oil lines, solenoid valves, pump and nozzle are in good condition
	Too great a pressure drop at brake plate	Adjust the burner
	Too strong draught prevents flame forming	Correct the boiler draught
	No spark	Check the ignition transformer. Check the ignition electrode settings and ceramics
	Preheater temperature too low	Check preheater function
	New oil type	Adjust the preheater's set operating temperature Check that the oil used has the physical parameters that the burner is rated for. If not, change the oil.

165 105 09-2 2021-01-21

8.3 Delayed ignition

Symptom	Causes	Remedies
Burner pulsates at start with hot flue gases	Excessively strong draught	Correct boiler draught
	Excessive pressure drop across the brake plate	Adjust the burner
	Preheater temperature too low	Check preheater function
	New oil type	Adjust the preheater's set operating temperature
		Ensure that the new oil's physical parameters are within the limits for which the burner is designed. If not, change the oil.
Burner pulsates at start	Nozzle partially blocked	Replace nozzle
	Oil pressure too low	Check and adjust
	Flue is blocked or damaged	Check and correct
	The fan wheel is slipping on the shaft	Check and tighten
	Pump coupling loose or worn	Replace
	Preheater blocked	Check the ignition electrode setting, (see technical data)
	Delayed ignition	Check that the ignition electrodes are not damaged
	Excessively strong draught	Check high voltage cables
		Check position of nozzle assembly setting
		Correct boiler draught
	Excessive pressure drop across the brake plate	Adjust the burner
	Preheater temperature too low	Check preheater function
	New oil type	Adjust the preheater's set operating temperature
		Ensure that the new oil's physical parameters are within the limits for which the burner is designed. If not, change the oil.

8.4 Noise in pump

Symptom	Causes	Remedies
The burner pump emits noise during start		Check the oil system in order to reduce pressure drop
The burner pump emits noise during operation	Insufficient negative pressure on the suction side pump	Rebuild the oil system to form a solution with a transport oil pump
		Check that the oil used has the physical parameters that the burner is rated for. If not, change the oil.
		Temperature of the oil from the tank is too low, increase the temperature of oil from tank
		Clean the pump filter

8.5 Pump pressure

Symptom	Causes	Remedies
The burner pump can not build up pressure	No oil	Check that there is oil and that it reaches the pump
	Oil viscosity too low	Check that the oil reaching the pump has the physical parameters that the pump can handle. Change the oil or the pump's oil parameters
	Pump worn	Replace the pump
	Pump run using impure oil that has worn the pump out prematurely	Replace pump and install self-cleaning filter in the oil system
	Blocked pump filter	Check, clean pump filter

9. Log of flue gas analysis

Owner	Adresss	Tel. no:
Installation		Tel. no:

Boiler

Type	Make	Power kW

Burner

Type	Model	Serial no.	Fuel

	Step 1	Step 2	Step 3
Draught in fireplace			
Fan Press mbar			
Filter smoke number			
CO_2			
O_2			
NOx			
CO			
Flue gas temp. °C			
Setting brake disc			
Setting Air damper			
Pump pressure bar			
Nozzle			

Test performed / 20	Address
Test performed by:	Postal address
Company name:	Tel. no:

EU Declaration of conformity

Bentone Oil Burners

Type:

BF 1	**ST 133**	**B 40**	**B 65**
ST 108	**ST 146**	**B 45**	**B 70**
ST 120	**B 30**	**B 55**	**B 80**

This declaration of conformity is issued under the sole responsibility of the manufacturer.
The object of the declaration described above is in conformity with:

- **Machinery Directive 2006/42/EC**
- **EMC 2014/30/EU**
- **The Restriction of the Use of Certain Hazardous Substances (RoHS) Directive 2011/65/EU**

References to the relevant harmonised standards used or references to the other technical specifications in relation to which conformity is declared:

EN 267:2020	Excluding the requirements of Annex J/K. Automatic forced draught burners for liquid fuels.

Additional information can be downloaded at: www.bentone.com

Manufacturer: Enertech AB
Näsvägen 8
SE-341 34 LJUNGBY
Sweden

Notified Body: TUV SÜD Product Service GmbH
Ridlerstaße 65
D-80339 München, Germany

Notified Body Number: 0123

Ljungby, 2022-10-10

Joachim Hultqvist

Technical Manager
Enertech AB

Ola Karlsson

Quality Manager
Enertech AB

Bentone®

UK Declaration of conformity

Bentone Oil Burners

Type:

BF 1	**ST 133**	**B 40**	**B 65**
ST 108	**ST 146**	**B 45**	**B 70**
ST 120	**B 30**	**B 55**	**B 80**

This declaration of conformity is issued under the sole responsibility of the manufacturer.
The object of the declaration described above is in conformity with:

- **Supply of Machinery (Safety) Regulations 2008**
- **Electromagnetic Compatibility Regulations 2016**
- **The Restriction of the Use of Certain Hazardous Substances in Electrical and Electronic Equipment Regulations 2012**

References to the relevant harmonised standards used or references to the other technical specifications in relation to which conformity is declared:

BS EN 267:2020	Excluding the requirements of Annex J/K. Automatic forced draught burners for liquid fuels.

Additional information can be downloaded at: www.bentone.com

Manufacturer: Enertech AB
Näsvägen 8
SE-341 34 LJUNGBY
Sweden

Approved Body: TUV SÜD BABT Unlimited
Octagon House,
Concorde Way, Segensworth North,
Fareham, Hampshire,
PO 15 5RL, United Kingdom

Approved Body Number: 0168

Ljungby, 2022-10-10

Joachim Hultqvist

Technical Manager
Enertech AB

Ola Karlsson

Quality Manager
Enertech AB

Bentone®

Enertech AB. P.O Box 309, SE-341 26 Ljungby
www.bentone.com