178 099 52-5 P93783 2023-04-25

Installation- and maintenance instruction

B 30 2A

LMO24.255C2E

AT2 45 C

Translation of the original instructions.

Bentone®

1

2

3

exempel example Beispiel

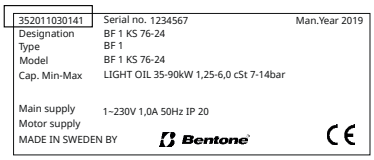

-sv

1. Manualer på övriga språk

2. www.bentone.com\ nedladdning eller scanna QR-koden.

3. Skriv in brännarens artikelnummer som finns på din typskylt (se bild) och välj ditt språk.

Detaljerad ecodesign information kan laddas ner på: www.bentone.com/ ecodesign.

-en

1. Manuals in other languages

2. www.bentone.com\download or scan QR-code.

3. Enter the burner`s article number on your data plate (see picture) and select language.

Detailed ecodesign information can be downloaded at: www.bentone.com/ecodesign.

-da

1. Manualer på andre sprog

2. www.bentone.com\ download eller scan QR-koden.

3. Indtast brænderens artikelnummer, der findes på typeskiltet (se billede), og vælg dit sprog.

Detaljerede oplysninger om ecodesign kan downloades på: www.bentone.com/ ecodesign.

-fr

1. Manuels dans d'autres langues

2. www.bentone.com\ download ou scannez le code QR.

3. Saisir le numéro d'article du brûleur sur votre plaque signalétique (consultez l'illustration) et sélectionnez la langue.

Des informations détaillées sur l'écodesign peuvent être téléchargées à l'adresse: www.bentone.com/ ecodesign.

-de

1. Gebrauchsanweisungen in anderen Sprachen

2. www.bentone.com\download oder scannen Sie den QR-Code.

3. Geben Sie die Artikelnummer des Brenners auf Ihrem Typenschild ein, (siehe Bild) und wählen Sie die Sprache aus.

Detaillierte Informationen zum Ecodesign können unter www.bentone.com/ecodesign heruntergeladen werden.

Table of contents

1. General Information ... 4
1.1 Delivery inspection ... 4
1.2 Safety ... 4

2. Technical data ... 6
2.1 Dimensions B 30 2A ... 6
2.2 Burner installation ... 7
2.3 Working field ... 7
2.4 Basic settings - Fuel oil ... 7
2.5 Basic settings - HVO/XTL ... 8
2.6 Technical specification ... 8
2.7 Setting of ignition electrodes and brake plate ... 9
2.8 Nozzle and pump pressure ... 9
2.9 Nozzle table ... 10
2.10 Components ... 12

3. Electric equipment ... 13
3.1 Safety system ... 13
3.2 Wiring diagram ... 13
3.3 Function ... 14
3.4 Colour codes ... 15
3.5 Fault codes ... 15

4. Installation ... 16
4.1 General instructions ... 16
4.2 Inspection and maintenance ... 16
4.3 Start-up ... 16
4.4 Preparing for installation ... 16
4.5 Oil distribution ... 16
4.6 Electrical connection ... 17
4.7 Handling and lifting instruction ... 18

5. Mounting ... 19
5.1 Check oil line seals ... 19
5.2 Example of Basic settings ... 20
5.3 Settings Damper motor, 2-stage ... 21

6. Pump ... 22
6.1 SUNTEC AT2 45 C / AT2 55 C ... 22
6.2 Pump operating principle ... 23
6.3 Suction line tables ... 24
6.5 Replacement of pump filter ... 26
6.4 Check oil line seals ... 26
6.6 Replacing the solenoid valve (pump) ... 27
6.7 Replacing the gasket seal (pump) ... 27

7. Service ... 28
7.1 Burner Service Schedule, Oil ... 28
7.2 Component replacement intervals ... 28
7.3 Combustion device ... 29
7.4 Air damper ... 30
7.5 Fan ... 31
7.6 Replace oil pump ... 32
7.7 Replacement of electrical components ... 33
7.8 Vibrations ... 34

8. Fault Location ... 35
8.1 Burner will not start ... 35
8.2 Burner will not start after normal use ... 35
8.3 Delayed ignition ... 36
8.4 Noise in pump ... 36
8.5 Pump pressure ... 37

9. Log of flue gas analysis ... 38

1. General Information

The burner may only be used for its intended purpose in accordance with the product's technical data.

We reserve the right to make design changes and cannot be held liable for any misprints or typographical errors.

Modifying the design or using accessories or components that have not been approved by Enertech in writing is strictly prohibited.

This Installation and Maintenance manual:

- is to be regarded as part of the burner and must always be kept near the installation site.
- must be read prior to installation.
- is intended for use by authorised personnel.

1.1 Delivery inspection

- Make sure everything is delivered and the goods have not been damaged during transit.
  Transport damage must be reported to the shipping company.
- If something is wrong with a delivery, report it to the supplier.

1.2 Safety

- before installation:

- Installation and work on the burner and associated system components may only be carried out by persons who have undergone relevant training.
- The product is packaged to prevent damage from occurring when handled – Handle the product with care! Lifting equipment must be used to lift larger packages.
- The products must be transported/stored on a level surface in a dry environment, max. 80% relative humidity, no condensation. Temperature -20 to +60 °C.

- installation:

- The burner must be installed in accordance with local regulations for fire safety, electrical safety, and fuel distribution.
- The premises must comply with local regulations pertaining to use of the burner, and must have adequate air supply.
- The installation site must be free of chemicals.
- Fire extinguisher with Class BE recommended.
- Make sure when installing the burner that there is enough space to service the burner.
- The electrical installation must be professionally carried out in accordance with current mains electricity regulations and in a professional manner.
- Make sure that the burner is suitable for the application (see Technical Data).
- All components must be installed without being bent, twisted or subjected to mechanical or thermal forces that affect components.

- Care must be taken by the installer to ensure that no electrical cables or fuel lines are pinched or otherwise damaged during installation or service.
- Flame tubes, fan wheels and air dampers, for example, may contain sharp edges.

- before first start:

- The burner must not be put into operation without proper safety and protection devices.
- Permitted ambient temperature during operation -10 to +60 °C. Max. 80% relative humidity, no condensation.
- The surface temperature of the burner's components may exceed 60 °C.
- Handle with caution – the burner has moving parts, and there is risk of crushing injuries.
- Seal inspections must be performed during installation and servicing to prevent leakage.
- fitting and installation work has been completed and approved.
- electrical installation has been correctly performed.
- flue gas ducts and combustion air ducts are not blocked.
- all actuators and control and safety devices are in working order and correctly set.
- If the boiler is equipped with an access hatch, this must be equipped with a hatch opening switch connected to the burner's safety system.
- When in operation, the burner's noise level can exceed 85 dBA – use hearing protection!

- Operation:

- Carry out all stipulated settings, service and inspection work within the set time.
- If the oil burner control has a solid red light, contact your installer.

2. Technical data

The burner is intended for:

- Operation in installations according to EN 303 and EN 267.
  When operating with a hot air boiler, the LMO24.255 or LMO44.255 control unit must be used.

Fuels:

- HVO/XTL according to EN 15940.
- Fuel oil according to DIN 51603-1.
- Fuel oil A Bio 10 according to DIN 51603-6.

2.1 Dimensions B 30 2A

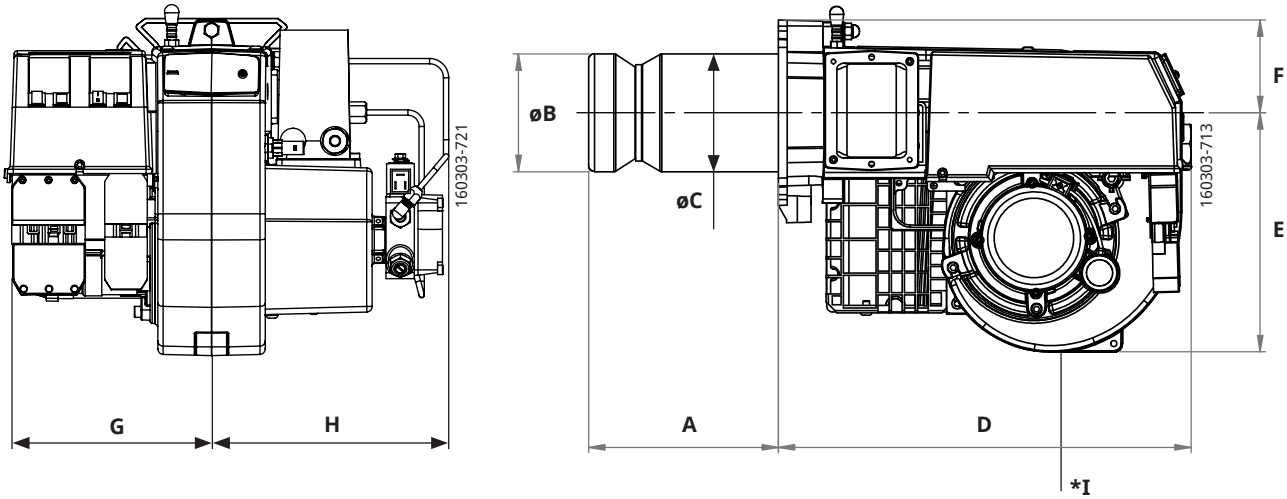

A	ØB	ØC	D	E	F	G	H	* I
174/315	108	108	378	220	85	187	214	200

* Min. recommended distance to floor.

2.1.1 Dimensions flange

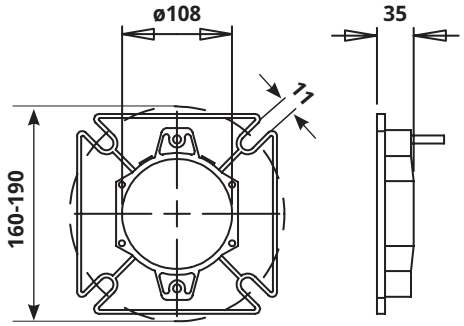

165 105 12-4

2.2 Burner installation

2.2.1 Hole patten

Make sure the hole pattern on the boiler is designed for fixing flange.

d1	d2	d3
ø 115	10	ø 160-190

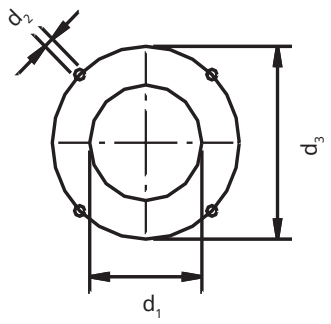

2.3 Working field

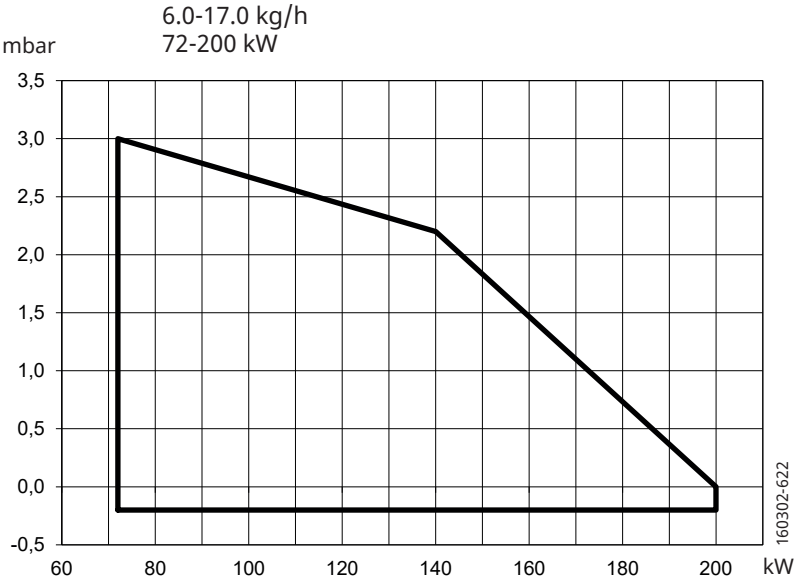

! Do not exceed working field.

2.4 Basic settings - Fuel oil

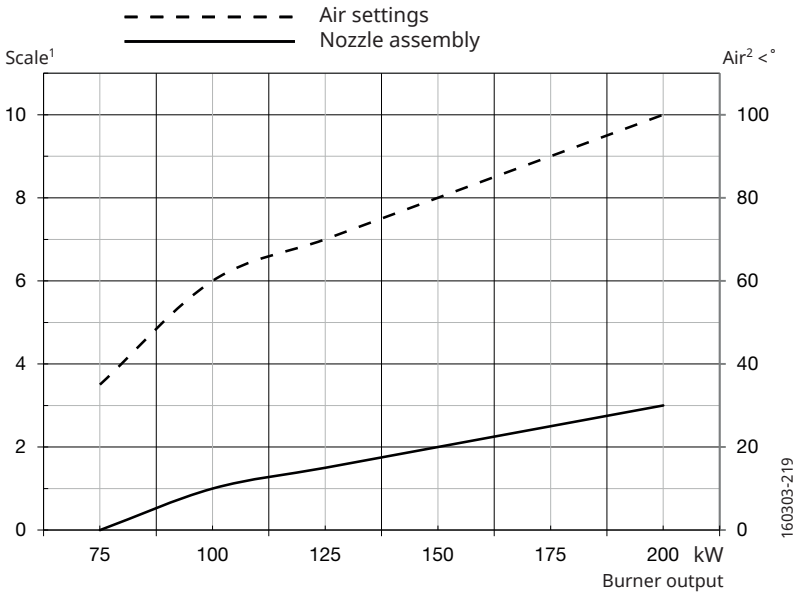

[1] Scale nozzle assembly and air damper without damper motor.
[2] Settings air damper with damper motor.

2.5 Basic settings - HVO/XTL

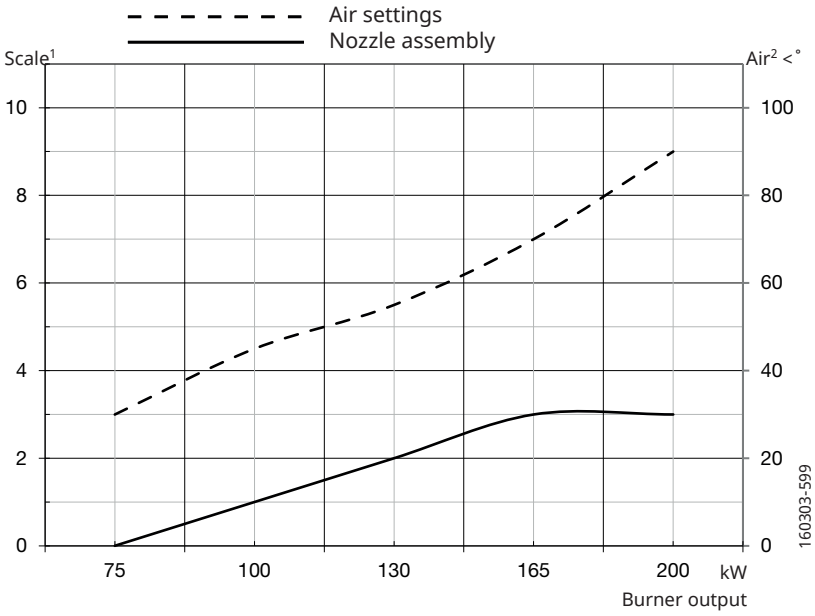

[1] Scale nozzle assembly and air damper without damper motor.
[2] Settings air damper with damper motor.

Flame signal

When operating at high power or low air excess and HVO/XTL is used as fuel, the flame signal may deteriorate (blue flame), the signal lamp in the reset button flashes green.

By lowering the air velocity or changing the flame detector to QRC1 A1, the flame signal can be improved.

2.6 Technical specification

	B 30 2A
Main supply [1)]	230V, 1~, 2.6/2.8A, 50Hz, IP20
Max fuse rating	6.3A
El_{min} preheater excluded	1.30A, 281W
El_{max} preheater excluded	1.40A, 297W
P_{SB}	0
NO_X-class	2
Noise level	82dBA

[1)] Max operating current, see data plate.

Measurements according to EN 15036-1:2006

Alt.1 The noise level of the burner can be reduced by equipping the burner with silencer. Installation must be done so it does not prevent air supply to the burner.

Alt.2 The burner's noise level can be reduced by connecting the burner's air intake to the air duct that opens into an appropriate location. Installation must be done so it does not prevent air supply to the burner.

2.7 Setting of ignition electrodes and brake plate

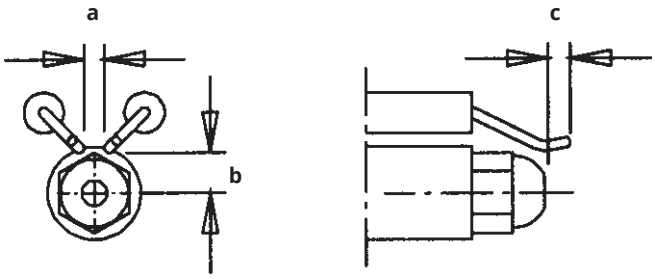

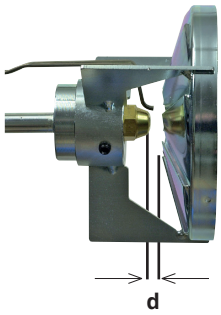

a	b	c	d
2.5-3.5	7.0-9.0	1.0-2.0	5.0-6.0

! *NB It is important that the spark does not strike against the brake plate or nozzle.

2.8 Nozzle and pump pressure

Due to different furnace geometries and capacities, it is not possible to recommend a nozzle model.

Nozzle:	45° Solid/semisolid
	60° Solid/semisolid
	80° Solid/semisolid
Pump pressure:	10 bar (8-25 bar) depending on pump model

2.9 Nozzle table

Pump pressure bar	10			11			12			13		
Gph	kg/h	kW	Mcal/h	kg/h	kW	Mcal/h	kg/h	kW	Mcal/h	kg/h	kW	Mcal/h
1,00	3,72	44	38	3,90	46	40	4,08	48	42	4,24	50	43
1,10	4,09	48	42	4,29	51	44	4,48	53	46	4,67	55	48
1,20	4,47	53	46	4,68	55	48	4,89	58	50	5,09	60	52
1,25	4,65	55	47	4,88	58	50	5,10	60	52	5,30	63	54
1,35	5,02	59	51	5,27	62	54	5,50	65	56	5,73	68	58
1,50	5,58	66	57	5,85	69	60	6,11	72	62	6,36	75	65
1,65	6,14	73	63	6,44	76	66	6,73	80	69	7,00	83	71
1,75	6,51	77	66	6,83	81	70	7,14	85	73	7,42	88	76
2,00	7,45	88	76	7,81	93	80	8,16	97	83	8,49	101	87
2,25	8,38	99	85	8,78	104	90	9,18	109	94	9,55	113	97
2,50	9,31	110	95	9,76	116	100	10,19	121	104	10,61	126	108
2,75	10,24	121	104	10,73	127	109	11,21	133	114	11,67	138	119
3,00	11,16	132	114	11,71	139	119	12,23	145	125	12,73	151	130
3,50	13,03	154	133	13,66	162	139	14,27	169	146	14,85	176	151
4,00	14,89	176	152	15,62	185	159	16,31	193	166	16,97	201	173
4,50	16,75	199	171	17,57	208	179	18,35	218	187	19,10	226	195
5,00	18,62	220	190	19,52	231	199	20,39	242	208	21,22	252	216
5,50	20,48	243	209	21,47	255	219	22,43	266	229	23,34	277	238
6,00	22,34	265	228	23,42	278	239	24,47	290	250	24,46	302	260
6,50	24,20	287	247	25,37	301	259	26,51	314	270	27,58	327	281
7,00	26,06	309	266	27,33	324	279	28,55	339	291	29,70	352	303
7,50	27,92	331	285	29,28	347	299	30,59	363	312	31,83	377	325
8,00	29,79	353	304	31,23	370	318	32,63	387	333	33,95	403	346
8,50	31,65	375	323	33,18	393	338	34,66	411	353	36,07	428	368
9,00	33,59	398	343	35,14	417	358	63,71	435	374	38,19	453	389
9,50	35,37	419	361	37,09	440	378	38,74	549	395	40,31	478	411
10,00	37,23	441	380	39,04	463	398	40,78	484	416	42,44	503	433
11,00	40,96	486	418	42,94	509	438	44,86	532	457	46,68	554	476
12,00	44,68	530	456	46,85	556	478	48,94	580	499	50,92	604	519
14,00	52,12	618	531	54,65	648	557	57,10	677	582	59,41	705	606
16,00	59,57	706	607	62,46	741	637	65,26	774	666	67,90	805	692
18,00	67,02	795	683	70,27	833	717	73,41	871	749	76,39	906	779
20,00	74,47	883	759	78,08	926	796	81,57	967	832	84,87	1007	865
22,00	81,91	971	835	85,89	1019	876	89,73	1064	915	93,36	1107	952
24,00	89,36	1060	911	93,70	1111	956	97,88	1161	998	101,85	1208	1039
26,00	96,81	1148	987	101,50	1204	1035	106,04	1258	1081	110,33	1308	1168

The table applies to oil with a viscosity of 4.4 mm^2/s (cSt) at a density of 830 kg/m^3.

Pump pressure bar	14			15			16			17		
Gph	kg/h	kW	Mcal/h	kg/h	kW	Mcal/h	kg/h	kW	Mcal/h	kg/h	kW	Mcal/h
1,00	4,40	52	45	4,56	54	46	4,71	56	48	4,85	57	49
1,10	4,84	57	49	5,01	59	51	5,18	61	53	5,34	63	54
1,20	5,29	63	54	5,47	65	56	5,65	67	58	5,82	69	59
1,25	5,51	65	56	5,70	68	58	5,89	70	60	6,07	72	62
1,35	5,95	70	61	6,15	73	63	6,36	75	65	6,55	78	67
1,50	6,60	78	67	6,83	81	70	7,06	84	72	7,27	86	74
1,65	7,27	86	74	7,52	89	77	7,77	92	79	8,01	95	82
1,75	7,71	91	79	7,97	95	81	8,24	98	84	8,49	101	87
2,00	8,81	104	90	9,12	108	93	9,42	112	96	9,71	115	99
2,25	9,91	118	101	10,26	122	105	10,60	126	108	10,92	130	111
2,50	11,01	131	112	11,39	135	116	11,77	140	120	12,13	144	124
2,75	12,11	144	123	12,53	149	128	12,95	154	132	13,35	158	136
3,00	13,21	157	135	13,67	162	139	14,13	168	144	14,56	173	148
3,50	15,42	183	157	15,95	189	163	16,49	196	168	16,99	201	173
4,00	17,62	209	180	18,23	216	186	18,84	223	192	19,42	230	198
4,50	19,82	235	202	20,51	243	209	21,20	251	216	21,84	259	223
5,00	22,03	261	225	22,79	270	232	23,55	279	240	24,27	288	247
5,50	24,23	287	247	25,07	297	256	25,91	307	264	26,70	317	272
6,00	26,43	313	270	27,49	326	280	28,27	335	288	29,13	345	297
6,50	28,63	340	292	29,63	351	302	30,62	363	312	31,55	374	322
7,00	30,84	366	314	31,91	378	325	32,98	391	336	33,98	403	374
7,50	33,04	392	337	34,19	405	349	35,33	419	360	36,41	432	371
8,00	35,25	418	359	36,47	433	372	37,69	447	384	38,80	460	396
8,50	37,45	444	382	38,74	459	395	40,04	475	408	41,26	489	421
9,00	39,65	470	404	41,02	486	418	42,40	503	432	43,69	518	446
9,50	41,85	496	427	43,30	514	442	44,75	531	456	46,11	547	470
10,00	44,06	523	449	45,58	541	465	47,11	559	480	47,11	559	480
11,00	48,46	575	494	50,14	595	511	51,82	615	528	53,40	633	545
12,00	52,87	627	539	54,70	648	558	56,53	670	576	58,25	691	594
14,00	62,68	732	629	63,81	757	651	65,95	778	669	67,96	806	693
16,00	70,49	836	719	72,93	865	744	75,38	894	769	77,67	921	792
18,00	79,30	940	809	82,05	973	837	84,80	1006	865	87,38	1036	891
20,00	88,11	1045	899	91,17	1081	930	94,22	1117	961	97,09	1151	990
22,00	96,92	1149	988	100	1189	1023	104	1229	1057	107	1267	1089
24,00	106	1254	1078	109	1297	1116	113	1341	1153	116	1382	1188
26,00	115	1359	1168	119	1406	1209	122	1453	1249	126	1497	1287

The table applies to oil with a viscosity of 4.4 mm2/s (cSt) at a density of 830 kg/m3.

2.10 Components

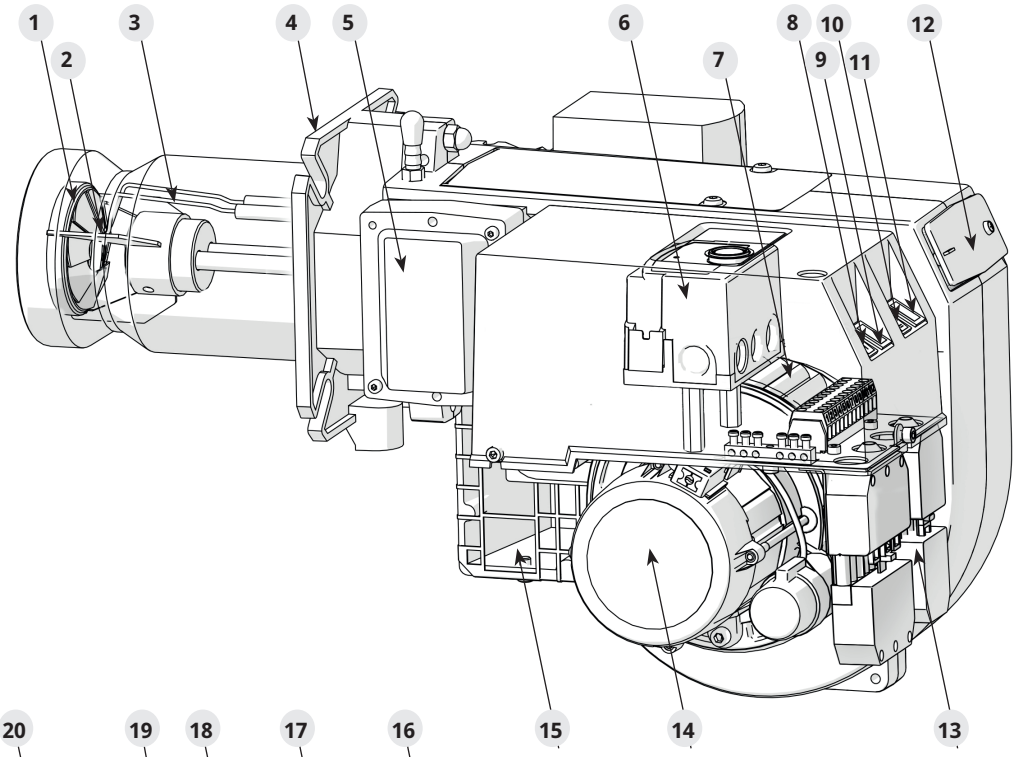

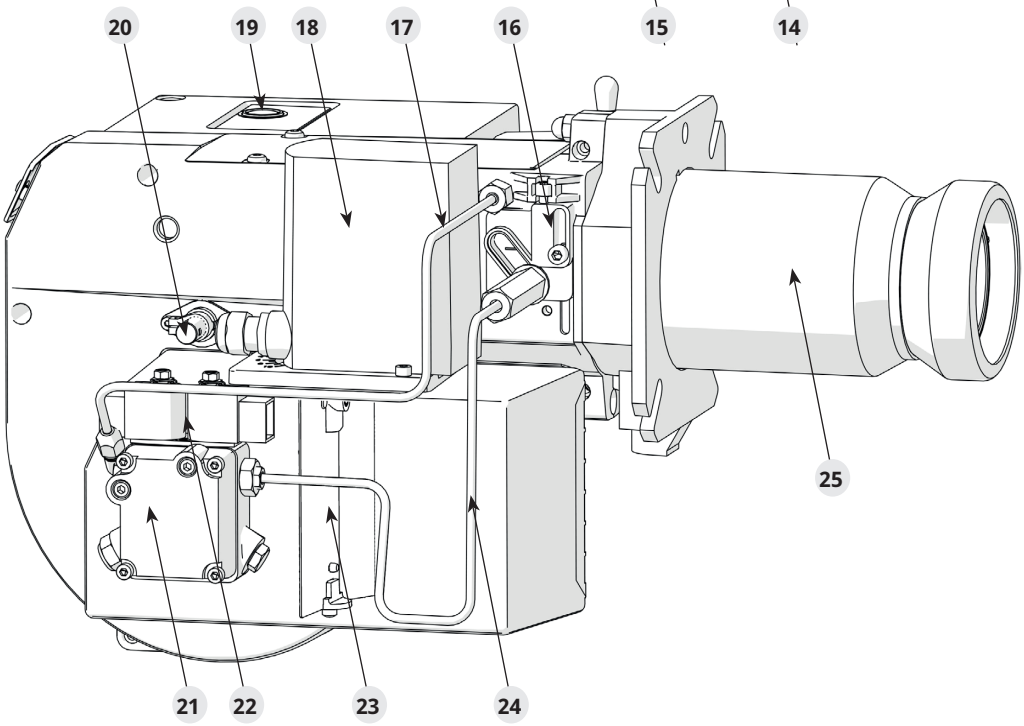

1. Brake plate
2. Nozzle
3. Ignition electrodes
4. Fixing flange
5. Ignition transformer
6. Burner control
7. Fan wheel
8. Switch 0-I
9. Indicator lamp, Stage 1
10. Switch I-II
11. Indicator lamp, Stage 2
12. Cover, inspection glass
13. Electrical connection
14. Motor
15. Air intake
16. Nozzle assembly adjustment
17. Connecting pipe, Stage 2
18. Damper motor
19. Reset button
20. Flame detector
21. Pump
22. Solenoid valves
23. Air damper
24. Connecting pipe, Stage 1
25. Flame tube

3. Electric equipment

3.1 Safety system

The safety system (safety switch for hatches, doors, water level, pressure, temperature and other safety devices) must be installed in the safety circuit in accordance with current regulations for the system.

The cables of the safety system must be separated so that the outgoing signal is not placed in the same cable as the incoming signal.

3.2 Wiring diagram

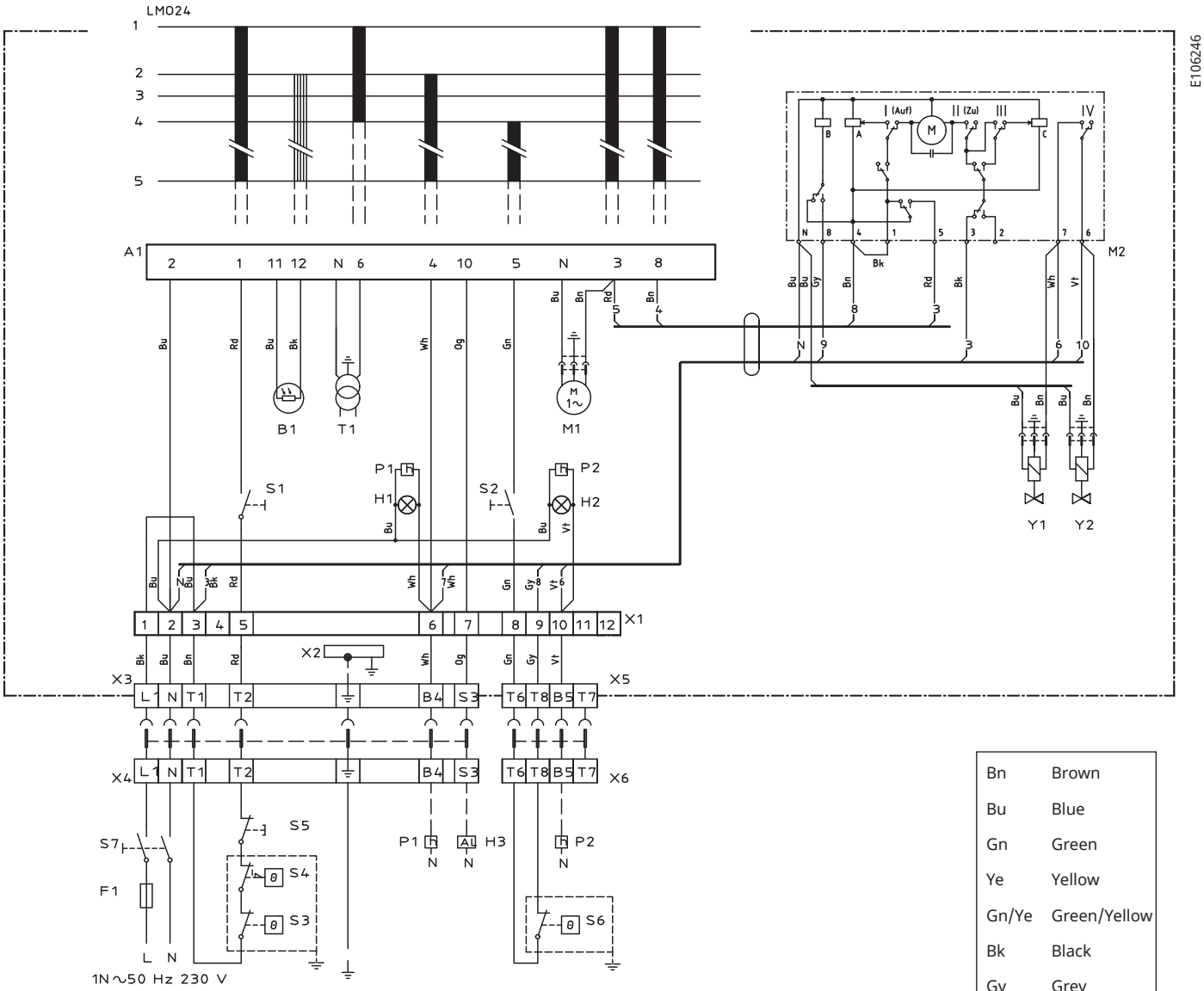

Bn	Brown
Bu	Blue
Gn	Green
Ye	Yellow
Gn/Ye	Green/Yellow
Bk	Black
Gy	Grey
Rd	Red
Wh	White
Og	Orange
Vt	Violet

165 105 08-2

3.2.1 Components

A1	Burner control
B1	Flame detector
F1	Fuse
H1	Lamp, low capacity
H2	Lamp, high capacity
H3	Lamp, lock-out signal 230 V
M1	Motor
M2	Damper motor
P1	Time meter, low capacity (optional)
P2	Time meter, high capacity (optional)
S1	Operating switch
S2	Operating switch, high/low capacity
S3	Control thermostat
S4	Temperature limiter
S5	Safety switch for hinged door
S6	Control thermostat, high/low
S7	Main switch
T1	Ignition transformer
X1	Connection terminal board
X2	Earth terminal
X3	Plug-in contact, burner
X4	Plug-in contact, boiler
X5	Plug-in contact high/low capacity burner
X6	Plug-in contact high/low capacity boiler
Y1	Solenoid valve 1
Y2	Solenoid valve 2

3.3 Function

1 Switch on operating switch and twin thermostat

A spark is formed. The air damper motor opens the damper to low load position. The burner motor starts, the prepurge goes on till the prepurge period expires and the solenoid valve 1 opens (2).

2. Solenoid valve 1 opens

Oil mist is formed and ignited. The photocell indicates a flame. The ignition spark goes out after flame indication (See Technical data oil burner control).

3. The safety time expires

a If no flame is established before this time limit the control cuts out.

b If for some reasons the flame disappears after this time limit, the burner will make an attempt to re-start.

4 High/Low thermostat ON

The burner is in operating position and can now change between full load and low load.

4-5 Operating position

If the burner operation is interrupted by means of the main switch or the thermostat, a new start takes place when the conditions in accordance with point 1 are fulfilled.

The oil burner control cuts out

A red lamp in the control is lit. Press the reset button and the burner re-starts.

! Mains connection and fuse in accordance with local regulations.

3.3.1 Technical data

	LMO14.113...	LMO24.255...
Preiginition time	15 s	25 s
Prepurge time	16 s	26 s
Postignition time	3 s	5 s
Safety lockout time	< 10 s	< 5 s
Reset time after lockout	< 1 s	< 1 s
Reaction time on flame failure	< 1 s	< 1 s
Ambient temperature	-5 - +60°C	-20 - +60°C
Min detector current required (with flame)	45 µA dc	45 µA dc
Max perm. detector current (without flame)	5.5 µA dc	5.5 µA dc

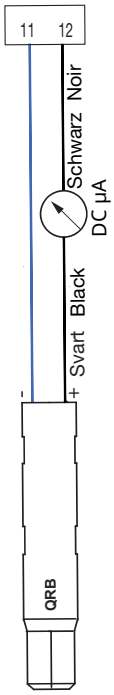

160303-333

3.4 Colour codes

When the burner starts, the light in the reset switch indicates the normal sequence, and also indicates whether something abnormal is happening as per the following table:

Preheater in operation	Solid yellow
Ignition switched on	Flashing yellow
Normal operation	Solid green
Operation, poor flame signal	Flashing green
Undervoltage	Flashing yellow-red
Fault, alarm	Solid red
False light	Flashing red-green
Communication mode	Fluttering red

3.5 Fault codes

When the red light for a blocked relay box comes on, you can get information about what has caused the problem by pressing and holding the reset button for 3 seconds.

The number of flashes below is repeated with a pause in between.

2 flashes	No flame signal when safety time expires
4 flashes	False light during start
7 flashes	3 x Losses of flame during operation
8 flashes	Time-out for preheater *
10 flashes	Incorrect wiring, internal fault or simultaneous occurrence of two faults

* In order for this fault code to occur, the preheater shall not reach its cut-off temperature within 10 mins. from switch on.

To return to normal operation: Press the reset button for 1 second.

If the reset button is instead kept pressed a second time for at least 3 seconds, you can, via an interface, obtain the corresponding information on a computer or flue gas analyser.

To return to normal operation: Press the reset button for 1 second.

4. Installation

4.1 General instructions

Oil burners must be installed in accordance with local regulations. The installer must therefore be knowledgeable of the regulations pertaining to oil and combustion.

Only oil suitable for the burner must be used and then in combination with a suitable oil filter installed before the burner's oil pump.

If the burner is replacing an existing burner, ensure that the oil filter is replaced or cleaned. Installation may only be performed by qualified personnel.

Care should be taken by the installer to ensure that electrical cables and oil lines are not pinched or otherwise damaged during installation or servicing.

4.2 Inspection and maintenance

The system must be maintained at the interval specified in the service schedule. If the burner is in a dirty environment, service should be done at more frequent intervals.

4.3 Start-up

In order to obtain the correct setting, a flue gas analysis and temperature measurement must be carried out. Otherwise, there is a risk of soot build up, poor efficiency or condensation in the chimney. The system must be fine-tuned at start-up. The temperature in the chimney at a depth of 0.5 m must be at least 60 °C to prevent condensation.

4.4 Preparing for installation

Check that the burner's dimensions and capacity range are suitable for the relevant boiler. The power data on the rating plate refers to the burner's minimum and maximum power.

4.5 Oil distribution

In order to achieve good reliability, it is important that the oil distribution system is designed correctly.

Take the following into account:

- Selection of pipe diameter, pipe length and height difference; see Pump instruction.
- Pipelines are to be laid with the fewest possible number of glands.
- The pipes are to be laid so that the oil supply hoses are not subjected to tensile stresses or become excessively bent when the burner is swung out or removed for servicing.
- The oil filter should be installed so that the filter cartridge can easily be replaced or cleaned.
- Parts in contact with oil must be selected in materials that are capable of withstanding the medium's physical properties.
- When installing oil hoses, check that the inlet and return hoses are fitted to the appropriate connection on the oil pump. The hoses must be located so that they do not bend or become subject to tensile load.
- Bleed the oil system. The oil pump/oil preheater may be damaged if run dry. The vacuum in the suction line should not fall below 0.3 bar during start-up.

! The oil filter must be installed before the burner's oil pump.

! Be sure to fill the burner oil system before starting it for the first time.

165 205 19-3

4.6 Electrical connection

- Before work on the electrical connection, the current must be disconnected so that the installation is isolated.
- Electrical connection must be done in accordance with the applicable regulations.
- Burners must be connected to an all-pole switch.
- Connection must conform to the wiring diagram.
- Use appropriately sized fuses.

! If any electrical connection is used other than that recommended by Enertech, there may be a risk of damage to property and personal injury.

4.7 Handling and lifting instruction

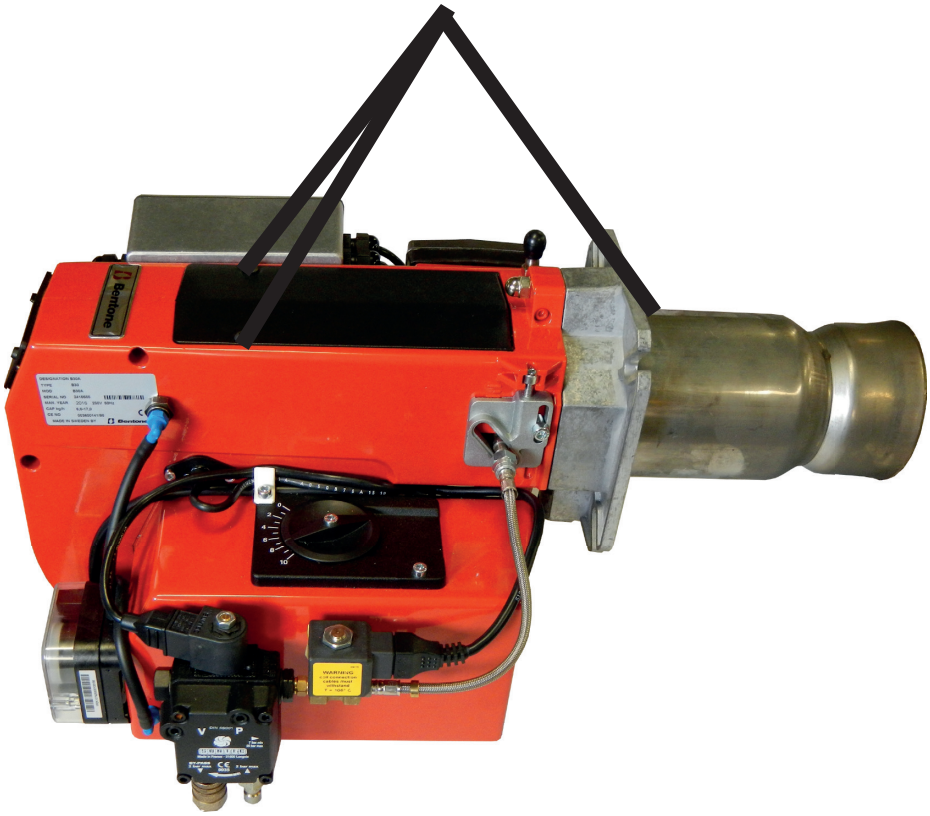

The lifting aid are available as accessories.

165 105 03-2

5. Mounting

1. Remove fan housing from fixing flange.
2. Remove the brake plate from the oil line.
3. Install the selected nozzles, (see Technical data).
4. Install the brake plate on the oil line.
5. Remove the flame tube from the flange.
6. Install the flange with gasket on the boiler.
7. Install flame tube, be sure to install the drainage hole downwards (not available on all flame tubes) so that any oil spills can drain out.
8. Insulate between flame tube and boiler door for reduced heat radiation.
9. Install the fan housing on the flange and lock with nuts.
10. Connect oil lines to the pump, (see chapter Service).
11. Connect the burner electrically, (see chapter Service).

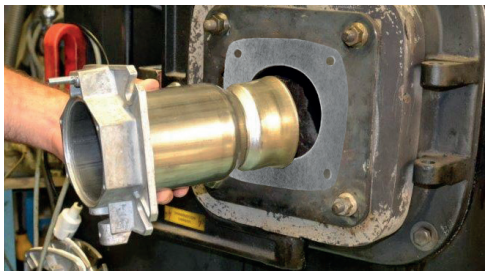

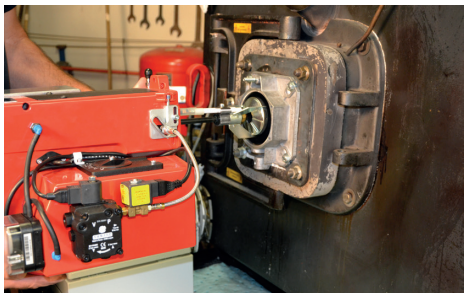

5.1 Check oil line seals

When the burner has been installed and put into operation, the tightness of the various coupling elements should be checked, in case of leakage - retighten the coupling elements.

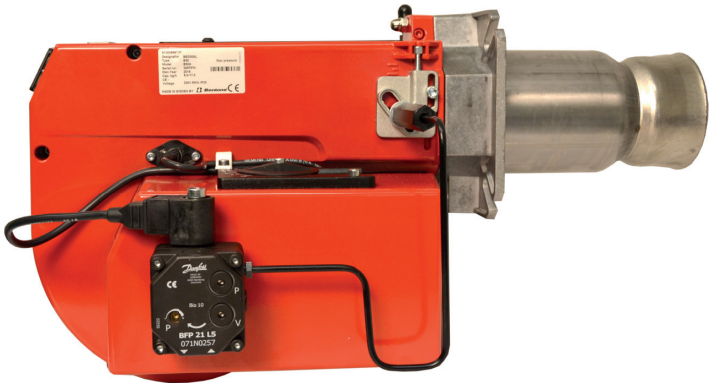

165 105 47-2

5.2 Example of Basic settings

Basic settings should only be seen as setting values to get burner to start. Once the burner has started and established flame, it is necessary to adjust the settings so that they are adapted to the installation and the fuel used.

B 30 2A

Burner output:	180 kW		
Estimated nozzle output:	180 / 11.86*	=	15.2 kg/h

(* Calorfic value Fuel oil = 11.86 kWh/kg)

This provides the following nozzle according to the nozzle table, (see Technical data).

180 kW distributed over 2 nozzles:			
Nozzle Step 1:	2.75 Gph	115 kW	64%
Nozzle Step 2:	2.75 Gph	65 kW	36%
Pump pressure Step 1:	9.0 bar		
Pump pressure Step 2:	22.0 bar		

Setting values for 180 kW according to basic setting diagram, (see Technical data).

Air	Stage 1	=	68
Fuel, Stage 2	Solenoid valve 2	=	80
Air	Stage 2	=	92
Insert	Stage 2	=	2.8

Selection of output and connection between the different power stages must be selected and adjusted so that the system achieves good functionality.

5.3 Settings Damper motor, 2-stage

Air adjustment

The damper motor rotates the air damper between three preset positions: completely closed, low load and high load. These positions are controlled in the motor by colored cam discs, the black cam disc controls the switching on/off of the solenoid valve. Adjust the amount of air by changing the position of the cam discs.

Blue cam disc is the limit position for closed air dampers and does not normally need to be changed.

Low load

- Set control switch for load position to position II (high load).
- Turn orange cam disc to 0° to reduce airflow and to 90° to increase airflow.
- Return the control switch to position I (low load) and check the combustion values.

High load

- Set control switch for load position to position I (low load).
- Turn red cam disc to 0° to reduce airflow and to 90° to increase airflow.
- Place black cam disc in a position between red and orange cam discs and adjust to obtain a good load change.
- Return the control switch to position II (high load) and check the combustion values.

Release

By pressing the button, the motor is disengaged and the air damper can be turned. The function is used when servicing air dampers.

Recommended excess air

Excess air flue gases		Max % CO_2
% O_2	% CO_2 Lambda 1.2	
3 - 5	≈12.5	15.4

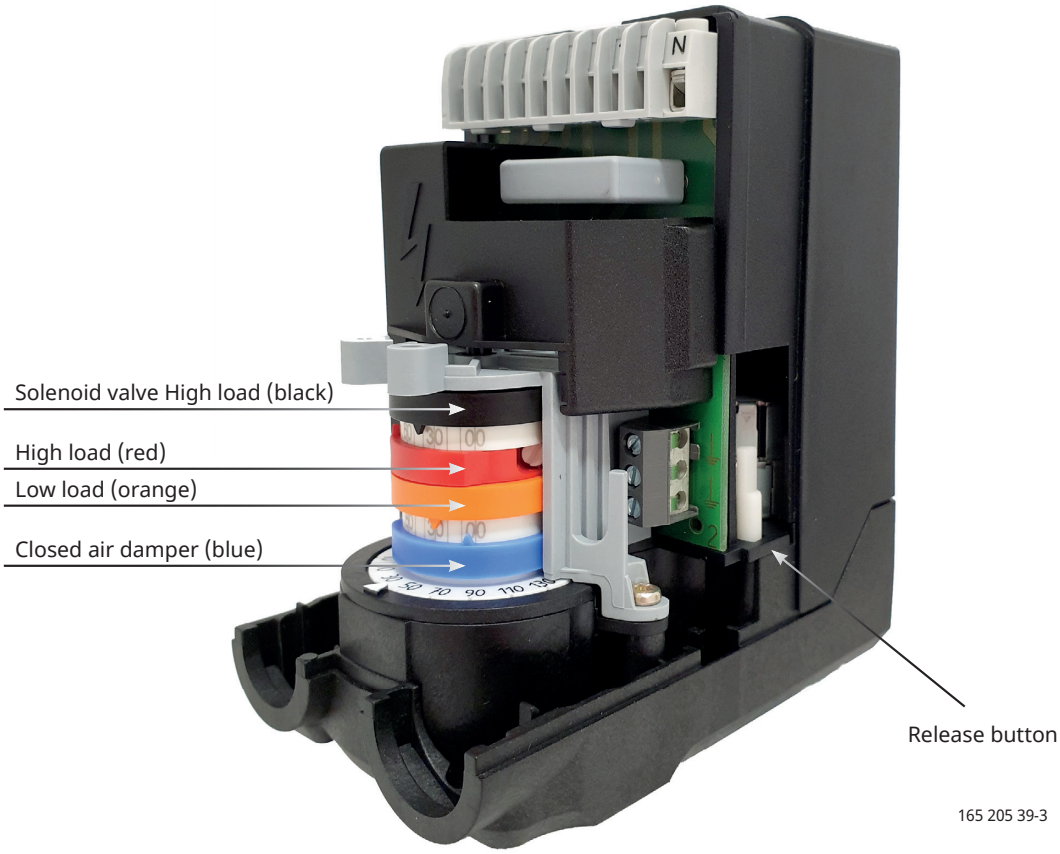

165 205 39-3 2022-10-27

6. Pump

6.1 SUNTEC AT2 45 C / AT2 55 C

Technical data		
One or two-pipe system.		
Viscosity range::	2-12 mm^2/s	
Pressure range::	8-25 bar	
Rated voltage of coil:	220/240V	50/60 Hz
Oil temperature::	max 60°C	

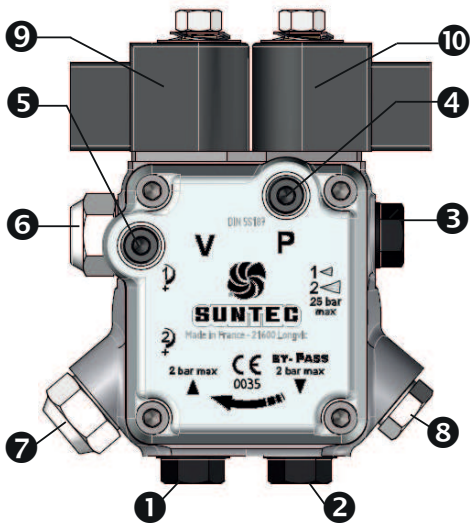

Components

1. Suction line G 1/4”
2. Return plug
3. Nozzle outlet G 1/8” Stage 2 and stage 1
4. Pressure gauge port G 1/8”
5. Vacuum gauge port G 1/8”
6. Pressure adjustment Stage 1
7. Pressure adjustment Stage 2
8. Pressure adjustment
9. Solenoid valve 1
10. Solenoid valve 2

165 105 14-2

6.2 Pump operating principle

The SUNTEC AT2 oil pump features 2 mode pressure operation and incorporates a blocking solenoid valve with in-line cut-off function. Switching between low and high modes is assured by a 2nd integral solenoid valvesolenoids are activat-ed, oil passes to the nozzle lines at the pressure set by the pressure regulating valve.

Applications

Light oil, B10 heating oil/biofuel blend (as defined in DIN V51603-6) and kerosene.

- Two firing rates (with a sole nozzle line).
- One or two-pipe system.

Pump operating principle

The gear set draws oil from the tank through the built-in filter and transfers it to the nozzle line via the cut-off solenoid valve. Pressure regulation is assured by two spool valves, one for each pressure mode. Switching between low and high pressure is assured by a ”normally open” by-pass solenoid valve.

When this solenoid is non-activated, a by-pass channel is open, allowing the normal functioning of the low pressure regulating valve which sets the nozzle pressure. When this solenoid is activated, the by-pass channel is closed, thus pressure will build up on both sides of the low pressure regulating valve eliminating its effect, and the high pressure regulating valve now determines the nozzle pressure.

The blocking solenoid valve of the nozzle line is of the ”normally closed” type. This design ensures extremely fast response and the switching can be selected according to the burner operating sequence and is independent of motor speed.

When this solenoid valve is non-activated, the valve is closed and all oil pressurized by the gear set passes through the regulators to suction or to the return line, depending upon pipe arrangement.

As soon as this solenoid is activated, oil passes to the nozzle line at the pressure set by the pressure regulating valves.

In two pipe operation, the by-pass plug must be fitted in the return port, which ensures that the oil dumped by the regulating valves is returned to the tank and the suction line flow is equal to the gear set capacity.

Bleeding in two pipe operation is automatic (it is assured by a bleed flat on the piston of the low pressure regulator), but it may be accelerated by opening a pressure port.

In one pipe operation, the by-pass plug must be removed, and the return plugged. Oil which is not required at the nozzle is returned directly to the gear inlet via the pressure regulating valves, and the suction line flow is equal to the nozzle flow. A pressure port must be opened to bleed the system

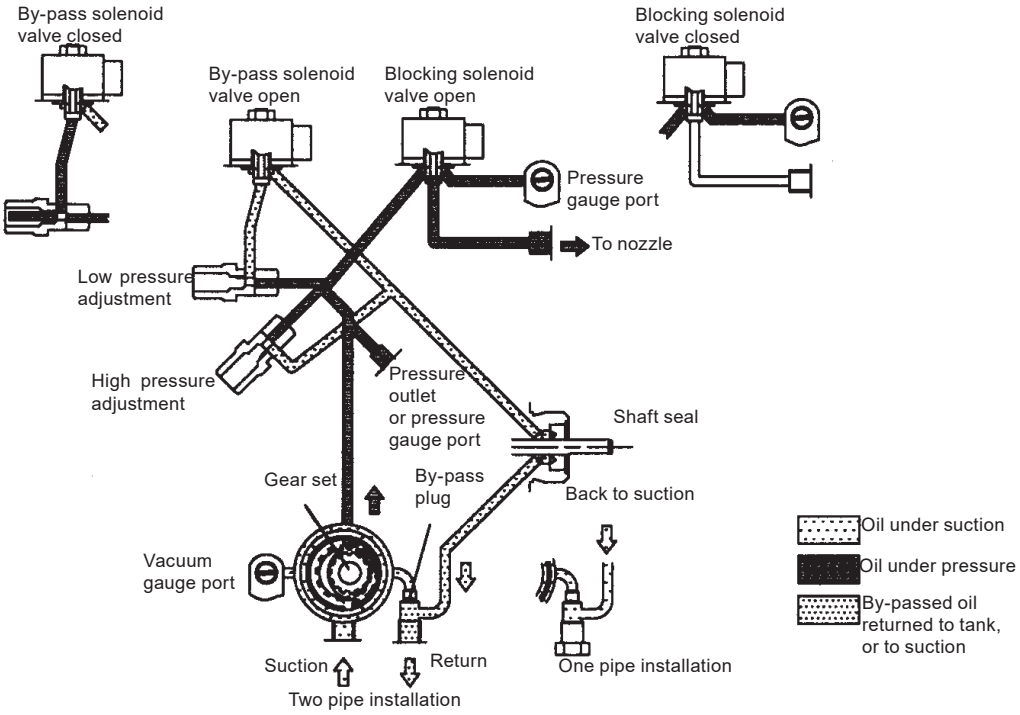

6.3 Suction line tables

6.3.1 Overlying tank

1-pipe system

Nozzle*/Düse* Gicleur*/Ugello* (US GPH)	0,50	0,60	0,80	1,00	1,50		2,00		4,00			6,00			9,50			
H (m) \ d (mm)	4	4	4	4	4	6	4	6	4	6	8	4	6	8	4	6	8	10
0	90	75	56	45	30	150	22	113	11	56	150	7	37	119	4	23	74	150
0,5	100	83	63	50	33	150	25	126	12	63	150	8	41	133	4	26	83	150
1	110	92	69	55	37	150	27	139	13	69	150	8	46	146	5	28	92	150
2	131	109	82	65	44	150	33	166	16	82	150	10	55	150	6	34	109	150
3	152	126	95	76	50	150	38	192	18	96	150	12	63	150	7	39	127	150
4	172	144	108	86	57	150	43	218	21	109	150	14	72	150	8	45	144	150

**A2L pumps : sum up the 2 nozzles / A2L-Pumpen : Summe der zwei Düsen*
pompe A2L : somme des 2 gicleurs / Per le pompe A2L aggiungere n. 2 ugelli

One pipe siphon feed system
Einstranginstallation - Tank höher als Pumpe
Installation monotube en charge
Impianti monotubo a sifone

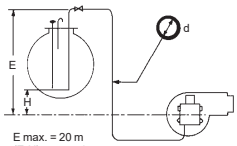

E max. = 20 m
(E-H) max. = 4,5 m

Two-pipe system

Pump/Pumpe Pompe/Pompa	35/45				55				65				75				95			
*Q** (l/h)*	*60*				*77*				*102*				*130*				*150*			
H (m) \ d (mm)	4	6	8	10	6	8	10	12	6	8	10	12	8	10	12	14	8	10	12	14
0	2	15	50	124	11	38	96	150	7	27	71	150	20	54	116	150	16	46	100	150
0,5	2	16	56	138	12	42	107	150	8	31	79	150	23	61	130	150	19	52	112	150
1	2	18	61	150	13	47	118	150	9	34	88	150	26	68	144	150	21	57	124	150
2	3	22	73	150	16	56	141	150	11	41	105	150	31	81	150	150	26	69	148	150
3	4	26	85	150	19	66	150	150	13	48	122	150	36	94	150	150	31	81	150	150
4	4	30	97	150	22	75	150	150	16	55	139	150	42	108	150	150	35	92	150	150

***Q = pump capacity @ 0 bar / Pumpenleistung bei 0 bar*
capacité de l'engrenage à 0 bar/portata della pompa a 0 bar.

Two pipe siphon feed system
Zweistranginstallation - Tank höher als Pumpe
Installation bitube en charge
Impianti bitubo a sifone

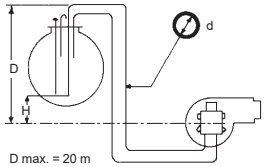

D max. = 20 m
(D-H) max. = 4,5 m

6.3.2 Underlying tank

1-pipe system

With an underlying tank a 1-pipe-system is not recommended

Two-pipe system

Pump/Pumpe Pompe/Pompa	35/45				55				65				75				95			
*Q** (l/h)*	*60*				*77*				*102*				*130*				*150*			
H (m) \ d (mm)	6	8	10	12	6	8	10	12	6	8	10	12	8	10	12	14	8	10	12	14
0	15	50	124	150	11	38	96	150	7	27	71	150	20	54	116	150	16	46	100	150
0,5	13	44	109	150	9	33	84	150	6	24	62	132	17	48	103	150	14	40	88	150
1	11	38	95	150	8	29	73	150	4	20	54	115	15	41	89	150	12	34	76	144
2	7	26	66	138	5	19	51	107	2	13	37	80	9	28	61	116	7	23	52	100
3	3	14	37	79		10	28	60		6	20	44	4	14	33	65		11	28	55
4			8	19			5	14				9			6	14			4	11

Two pipe lift system
Zweistranginstallation - Tank tiefer als Pumpe
Installation bitube en aspiration
Impianti bitubo in aspirazione

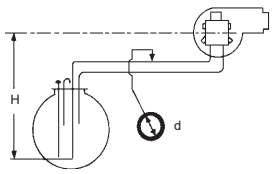

H max. = 4,5 m

The suction line tables consist of theoretically calculated values where the pipe dimensions and oil velocity have been matched so that tur-bulences will not occur. Such tur-bulences will result in increased pressure losses and in acoustic noise in the pipe system. In addition to drawn copper piping a pipe system usually comprises 4 elbows, a non-return valve, a cut-off valve and an external oil filter.

The sum of these individual resi-stances is so insignificant that they can be disregarded. The tables do not include any lengths exceeding 100 m as experience shows that longer lengths are not needed.

The tables apply to a standard fuel oil of normal commercial quality accor-ding to current standards. On commis- sioning with an empty tube system the oil pump should not be run without oil for more than 5 min. (a condition is that the pump is being lubricated during operation).

The tables state the total suction line length in metres at a nozzle capacity of 9,5 Gph. Max. permissible pressure at the suction and pressure side is 2,0 bar.

6.4 Check oil line seals

Once the burner has been installed and commissioned, the seals of the various coupling elements should be checked.

When a leak is detected, it is usually sufficient to tighten the coupling element that is leaking.

! Use caution when operating the burner, surfaces may be hot.

! When servicing oil bearing components, check for oil leakage when the burner is commissioned after servicing.

6.5 Replacement of pump filter

1. Disconnect the main power and shut off the fuel supply.
2. Loosen the pump cover's screws.
3. Remove the filter and gasket
4. Mount new gasket and filter
5. Refit the cover
6. Switch on the main power and open the fuel supply.
7. Start burner and check/adjust combustion.

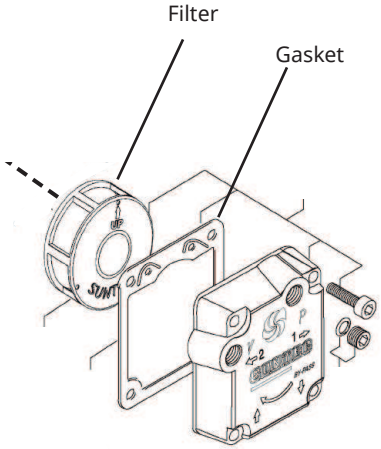

! When servicing/replacing components that affect combustion, flue gas analysis and soot test must be carried out following installation.

6.6 Replacing the solenoid valve (pump)

1. Disconnect the main power and shut off the fuel supply.

> **!** Before obtaining access to electrical and fuel line components all supply circuits must be disconnected.

2. Disconnect the solenoid valves' electrical cables
3. Loosen the nut holding the magnet terminal
4. Loosen the screws securing the valve's mounting plate
5. Remove the valve
   1. Make sure it is the right valve, there are NC and NO (two versions).
6. Install the new valve and refit the other parts in the reverse order.
7. Switch on the main power and check the operation of the new component.
8. Start burner and check/adjust combustion.

6.7 Replacing the gasket seal (pump)

1. Disconnect hoses, oil pipes, and electrical cables
2. Loosen the pump (screw J)
3. Loosen the gasket seal's locking rings
4. Remove the old gasket seal (2)
5. Install the new gasket seal
6. Connect hoses, oil pipes, and electrical cables
7. Test run and check seals

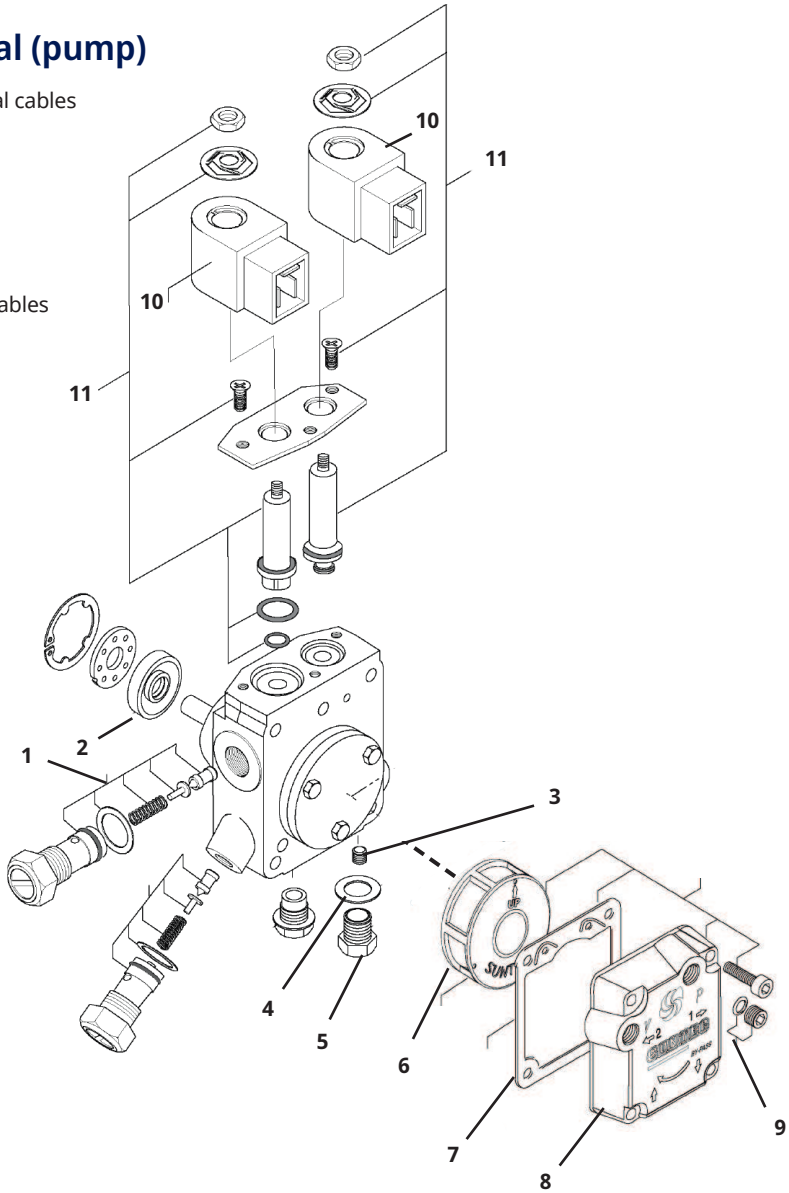

Component list Oil pump

1. Pressure regulator kit 5 - 25 bars
2. Shaft seal kit (lip seal + protective cone)
3. By-pass plug
4. G 1/4 gasket
5. G 1/4 steel plug
6. Filter
7. Cover gasket
8. Cover gaskets + filter
9. Pressure gauge port or vacuum gauge port screw, O-ring
10. Coil
11. Tube assy

7. Service

Service and maintenance work may only be performed by qualified personnel. Perform operational check of all safety systems and components at each service. Only Enertech original parts should be used when replacing components.

! Use caution when operating the burner, surfaces may be hot.

7.1 Burner Service Schedule, Oil

Servicing must be carried out once a year or after 3,000 hours of operation.

Burner	1 year	3,000 h
Filter	1 year replacement	3,000 h replacement
Oil hose	1 year inspection/replacement	
Nozzle	1 year replacement	3,000 h replacement
Electrodes	Replacement/cleaning 1 year	Replacement/ceaning 3,000 h
Brake disc	Replacement/cleaning 1 year	Replacement/ceaning 3,000 h
Motor	1 year	3,000 h
Drive shaft	Check/replace in the event of damage	Check/replace in the event of damage
Fan wheel	“1 year Replace if need for cleaning/imbalance”	“3000 h Replace if need for cleaning/imbalance”
Oil filter	Once a year	3,000 h replacement
Oil valve	Tightness check once a year	Replace if leakage detected

7.2 Component replacement intervals

Components	**Service life – Recommended replacement**	**Service life – Recommended replacement Operating cycles**
Control system	10 years	250,000 cycles
Pressure switch	10 years	250,000 cycles
Ignition system with flame guard	10 years	250,000 cycles
UV flame sensor	10,000 h	N/A
Damper motor		500,000 cycles
Contactor	10 years	500,000 cycles

The burner and its components must be recycled according to applicable regulations.

7.3 Combustion device

1. Disconnect the main power and shut off the fuel supply.

! Before obtaining access to electrical and fuel line components all supply circuits must be disconnected.

2. Loosen nut (G) and lift fan housing off fixing flange.
3. Remove brake plate and electrode holder from the oil tube and clean.
4. Replace nozzle.
5. Clean or replace brake plate.
6. Check ignition electrodes, replace if necessary (see Technical data for adjustment).
7. Fit brake plate and electrode holder, (see Technical data for adjustment).
8. Check flame tube and clean if necessary.
9. Install flame tube, be sure to install the drainage hole downwards (not available on all flame tubes) so that any oil spills can drain out.
10. Refit fan housing and fixing flange, lock with nut (G).
11. Switch on the main power and open the fuel supply.
12. Start burner and check/adjust combustion.

! Use caution when operating the burner, surfaces may be hot.

! NB: When soiled, always replace nozzles with new nozzles. Do not clean.

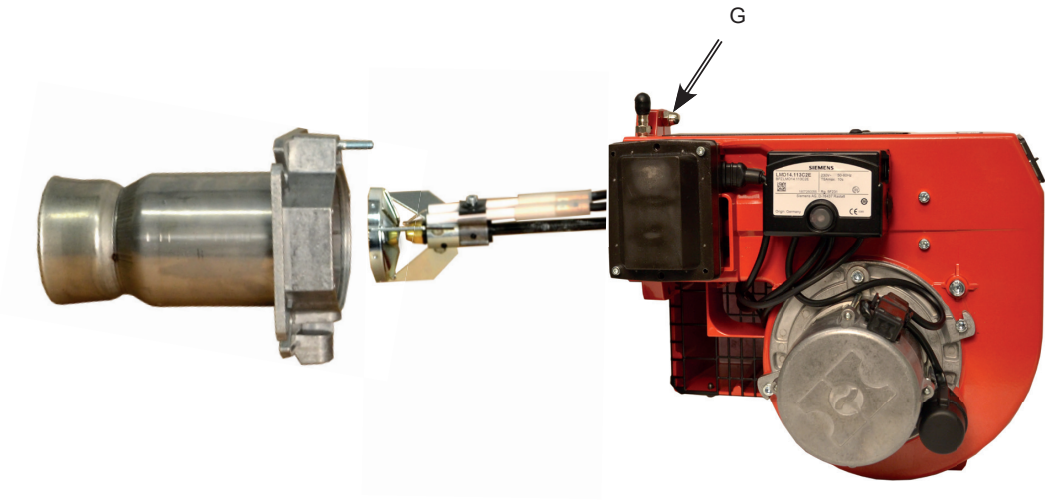

! When servicing/replacing components that affect combustion, flue gas analysis and soot test must be carried out following installation.

165 405 13

7.4 Air damper

1. Disconnect the main power and shut off the fuel supply.

! **Before obtaining access to electrical and fuel line components all supply circuits must be disconnected.**

2. Note the setting of the air damper and loosen the regulator locking screw (H).
3. Loosen screws (G), set scale to 7 and lift up.
4. Remove the intake grille at the air intake.
5. Clean the air damper and air intake (I), lubricate the damper shaft if necessary.
6. Refit air damper and regulator.
7. Refit the intake grille.
8. Switch on the main power and open the fuel supply.
9. Start burner and check/adjust combustion.

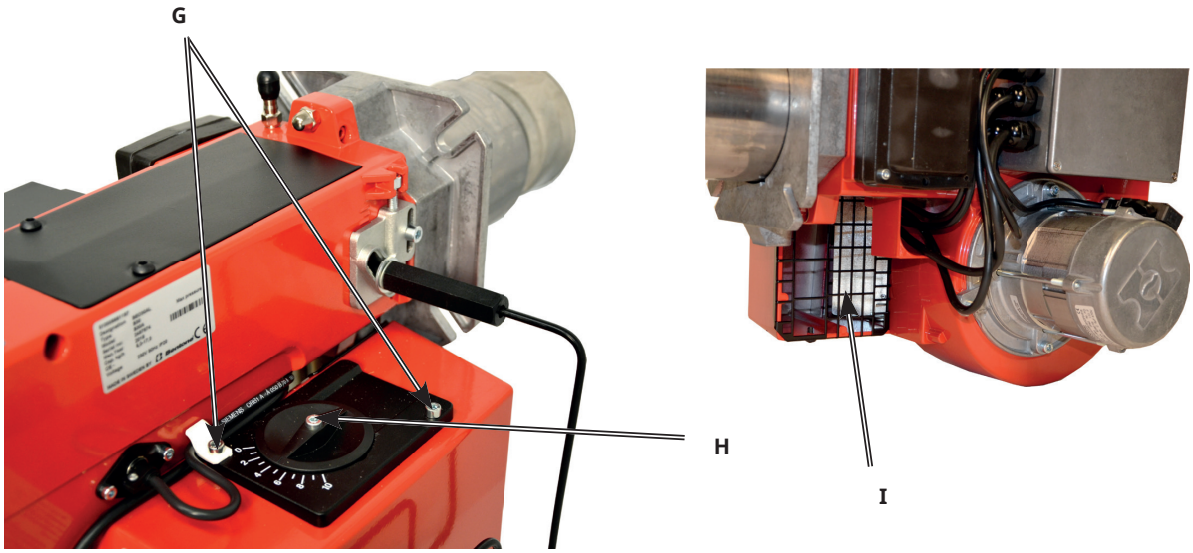

! **When servicing/replacing components that affect combustion, flue gas analysis and soot test must be carried out following installation.**

165 405 14

7.5 Fan

1. Disconnect the main power and shut off the fuel supply.

> **!** **Before obtaining access to electrical and fuel line components all supply circuits must be disconnected.**

2. Loosen the motor electrical connection and screws (X) enough to turn and lift out the motor.
3. Check the fan wheel attachment and any skew, replace if damaged.
4. Clean or replace the fan wheel.
5. Refit the parts, making sure that the drive shaft is correctly connected at both ends.
6. Switch on the main power and open the fuel supply.
7. Start burner and check/adjust combustion.

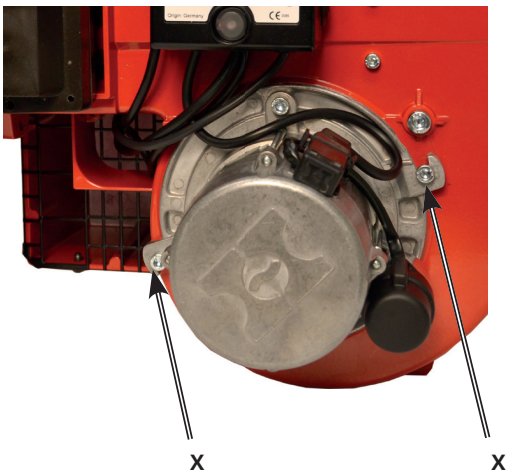

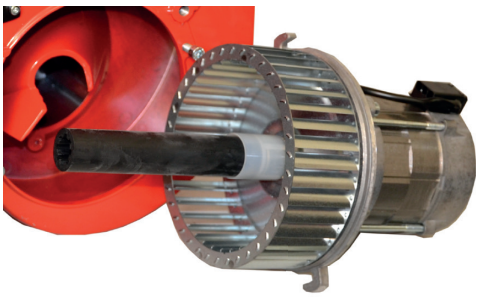

7.5.1 Replace drive shaft

1. Disconnect the main power and shut off the fuel supply.
2. Loosen the motor electrical connection and screws (X) enough to turn and lift out the motor.
3. Remove drive shaft and drive coupling from motor.
4. Replace drive shaft coupling on pump.
5. Refit coupling, pump and motor, making sure drive shaft is connected correctly at both ends.
6. Switch on the main power and open the fuel supply.

> **!** **When servicing/replacing components that affect combustion, flue gas analysis and soot test must be carried out following installation.**

7.7 Replace oil pump

1. Disconnect the main power and shut off the fuel supply.

! **Before obtaining access to electrical and fuel line components all supply circuits must be disconnected.**

2. Disconnect hoses, connection pipes and electrical connection from pump.
3. Loosen screws (J) and pull out oil pump.
4. Fit new pump coupling.
5. Refit the pump, making sure that the drive shaft is correctly connected at both ends.
6. Refit hoses, connection pipes and electrical connection.
7. Switch on the main power and open the fuel supply.
8. Bleed the pump.
9. Start burner and check/adjust combustion.

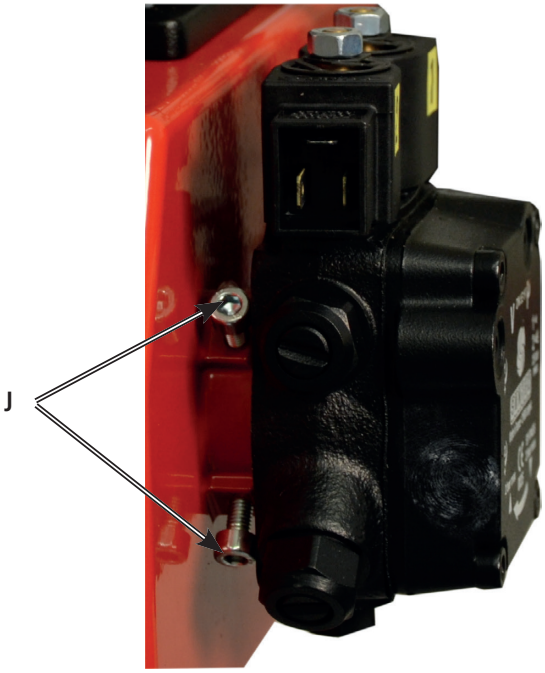

! **When servicing/replacing components that affect combustion, flue gas analysis and soot test must be carried out following installation.**

165 405 19

7.8 Replacement of electrical components

1. Disconnect the main power and switch off the fuel supply.

! Before obtaining access to terminals,
all supply circuits must be disconnected.

2. Note the connection of the existing component and disassemble.
3. Fit new component with same connection or with specified alternative connection.
4. Switch on the main power and check the operation of the new component.
5. Start burner and check/adjust combustion.

! When servicing/replacing components that affect combustion, flue gas analysis and soot test must be carried out following installation.

165 105 11-3

7.9 Vibrations

Maximum permitted vibration level is 5.0 mm/s.

- Check tightness of fasteners.
- Check fan wheel for damage and contamination (replace if necessary).
- Check motor shaft and bearings. If they are worn, replace the motor.

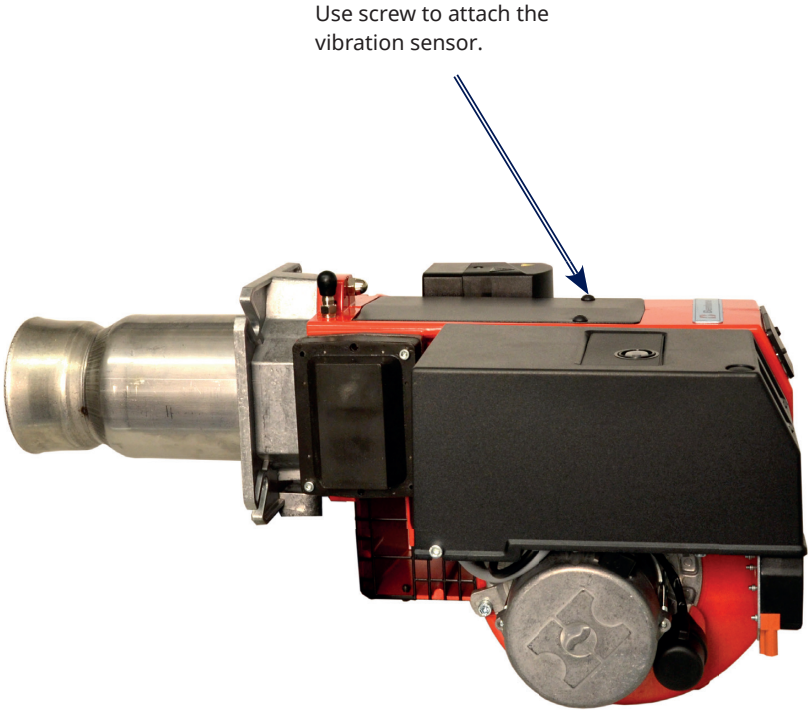

165 405 22

8. Fault Location

8.1 Burner will not start

Symptom	Causes	Remedies
Motor starts Burner pre-ventilates Flame formed Burner trips	Unstable flame Excess air Low oil pressure Incorrect combustion apparatus settings	Adjust the damper Check the oil pressure Check the nozzle in relation to the combustion apparatus dimensions and the ignition electrode position
Motor starts Burner pre-ventilates No flame formed Burner trips	Flame monitor does not register light Defective flame monitor Defective oil burner control	Check the flame monitor is clean and can register light Check with using new photocell Check using new oil burner control (Note: replacement of photocell recommended if oil burner control replaced)
	No oil	Check the oil supply to the burner and that there are no air bubbles in the pump
	False light	Check function of solenoid
	No spark	Check flame monitor does not register ambient light Check high voltage wiring and ignition electrodes
Motor does not start	Preheater does not get up to temperature.	Check preheater function

8.2 Burner will not start after normal use

Symptom	Causes	Remedies
Burner does not start	Fuse blown	Check and replace fuse as necessary. Investigate cause of fault
	Boiler thermostat has not reset	Adjust thermostat
	Preheater does not get up to temperature	Check preheater function
Burner pre-ventilates	Overheating protection has deployed	Reset the overheating protection. Investigate the cause of its deploying. Remedy fault
	Defective preheater	Check by replacing with new
	Defective oil burner control or flame monitor	
Burner stops	No oil supply	Check that tank, oil lines, solenoid valves, pump and nozzle are in good condition
	Too great a pressure drop at brake plate	Adjust the burner
	Too strong draught prevents flame forming	Correct the boiler draught
	No spark	Check the ignition transformer. Check the ignition electrode settings and ceramics
	Preheater temperature too low	Check preheater function
	New oil type	Adjust the preheater's set operating temperature Check that the oil used has the physical parameters that the burner is rated for. If not, change the oil.

165 105 09-2 2021-01-21

8.3 Delayed ignition

Symptom	Causes	Remedies
Burner pulsates at start with hot flue gases	Excessively strong draught	Correct boiler draught
	Excessive pressure drop across the brake plate	Adjust the burner
	Preheater temperature too low	Check preheater function
	New oil type	Adjust the preheater's set operating temperature
		Ensure that the new oil's physical parameters are within the limits for which the burner is designed. If not, change the oil.
Burner pulsates at start	Nozzle partially blocked	Replace nozzle
	Oil pressure too low	Check and adjust
	Flue is blocked or damaged	Check and correct
	The fan wheel is slipping on the shaft	Check and tighten
	Pump coupling loose or worn	Replace
	Preheater blocked	Check the ignition electrode setting, (see technical data)
	Delayed ignition	Check that the ignition electrodes are not damaged
	Excessively strong draught	Check high voltage cables
		Check position of nozzle assembly setting
		Correct boiler draught
	Excessive pressure drop across the brake plate	Adjust the burner
	Preheater temperature too low	Check preheater function
	New oil type	Adjust the preheater's set operating temperature
		Ensure that the new oil's physical parameters are within the limits for which the burner is designed. If not, change the oil.

8.4 Noise in pump

Symptom	Causes	Remedies
The burner pump emits noise during start		Check the oil system in order to reduce pressure drop
The burner pump emits noise during operation	Insufficient negative pressure on the suction side pump	Rebuild the oil system to form a solution with a transport oil pump
		Check that the oil used has the physical parameters that the burner is rated for. If not, change the oil.
		Temperature of the oil from the tank is too low, increase the temperature of oil from tank
		Clean the pump filter

8.5 Pump pressure

Symptom	Causes	Remedies
The burner pump can not build up pressure	No oil	Check that there is oil and that it reaches the pump
	Oil viscosity too low	Check that the oil reaching the pump has the physical parameters that the pump can handle. Change the oil or the pump's oil parameters
	Pump worn	Replace the pump
	Pump run using impure oil that has worn the pump out prematurely	Replace pump and install self-cleaning filter in the oil system
	Blocked pump filter	Check, clean pump filter

9. Log of flue gas analysis

Owner	Adresss	Tel. no:
Installation		Tel. no:

Boiler

Type	Make	Power kW

Burner

Type	Model	Serial no.	Fuel

	Step 1	Step 2	Step 3
Draught in fireplace			
Fan Press mbar			
Filter smoke number			
CO_2			
O_2			
NOx			
CO			
Flue gas temp. °C			
Setting brake disc			
Setting Air damper			
Pump pressure bar			
Nozzle			

Test performed / 20	Address
Test performed by:	Postal address
Company name:	Tel. no:

EU Declaration of conformity

Bentone Oil Burners

Type:

BF 1	**ST 133**	**B 40**	**B 65**
ST 108	**ST 146**	**B 45**	**B 70**
ST 120	**B 30**	**B 55**	**B 80**

This declaration of conformity is issued under the sole responsibility of the manufacturer.
The object of the declaration described above is in conformity with:

- **Machinery Directive 2006/42/EC**
- **EMC 2014/30/EU**
- **The Restriction of the Use of Certain Hazardous Substances (RoHS) Directive 2011/65/EU**

References to the relevant harmonised standards used or references to the other technical specifications in relation to which conformity is declared:

EN 267:2020	Excluding the requirements of Annex J/K. Automatic forced draught burners for liquid fuels.

Additional information can be downloaded at: www.bentone.com

Manufacturer: Enertech AB
Näsvägen 8
SE-341 34 LJUNGBY
Sweden

Notified Body: TUV SÜD Product Service GmbH
Ridlerstaße 65
D-80339 München, Germany

Notified Body Number: 0123

Ljungby, 2022-10-10

Joachim Hultqvist

Technical Manager
Enertech AB

Ola Karlsson

Quality Manager
Enertech AB

Bentone®

UK Declaration of conformity

Bentone Oil Burners

Type:

BF 1	**ST 133**	**B 40**	**B 65**
ST 108	**ST 146**	**B 45**	**B 70**
ST 120	**B 30**	**B 55**	**B 80**

This declaration of conformity is issued under the sole responsibility of the manufacturer.
The object of the declaration described above is in conformity with:

- **Supply of Machinery (Safety) Regulations 2008**
- **Electromagnetic Compatibility Regulations 2016**
- **The Restriction of the Use of Certain Hazardous Substances in Electrical and Electronic Equipment Regulations 2012**

References to the relevant harmonised standards used or references to the other technical specifications in relation to which conformity is declared:

BS EN 267:2020	Excluding the requirements of Annex J/K. Automatic forced draught burners for liquid fuels.

Additional information can be downloaded at: www.bentone.com

Manufacturer: Enertech AB
Näsvägen 8
SE-341 34 LJUNGBY
Sweden

Approved Body: TUV SÜD BABT Unlimited
Octagon House,
Concorde Way, Segensworth North,
Fareham, Hampshire,
PO 15 5RL, United Kingdom

Approved Body Number: 0168

Ljungby, 2022-10-10

Joachim Hultqvist

Technical Manager
Enertech AB

Ola Karlsson

Quality Manager
Enertech AB

Bentone®

Enertech AB. P.O Box 309, SE-341 26 Ljungby
www.bentone.com