178 112 82-3 P93783 2022-10-03



Installation- and maintenance instruction

BG 550-2

BP230UVFR-S4

MB-ZRDLE412

Translation of the original instructions.

Bentone®





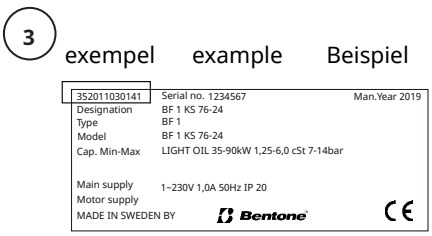

-sv

1. Manualer på övriga språk

2. www.bentone.com\ nedladdning eller scanna QR-koden.

3. Skriv in brännarens artikelnummer som finns på din typskylt (se bild) och välj ditt språk.

Detaljerad ecodesign information kan laddas ner på: www.bentone.com/ ecodesign.

-en

1. Manuals in other languages

2. www.bentone.com\ download or scan QR-code.

3. Enter the burner`s article number on your data plate (see picture) and select language.

Detailed ecodesign information can be downloaded at: www.bentone.com/ ecodesign.

-da

1. Manualer på andre sprog

2. www.bentone.com\ download eller scan QR-koden.

3. Indtast brænderens artikelnummer, der findes på typeskiltet (se billede), og vælg dit sprog.

Detaljerede oplysninger om ecodesign kan downloades på: www.bentone.com/ ecodesign.

-fr

1. Manuels dans d'autres langues

2. www.bentone.com\ download ou scannez le code QR.

3. Saisir le numéro d'article du brûleur sur votre plaque signalétique (consultez l'illustration) et sélectionnez la langue.

Des informations détaillées sur l'écodesign peuvent être téléchargées à l'adresse: www.bentone.com/ ecodesign.

-de

1. Gebrauchsanweisungen in anderen Sprachen

2. www.bentone.com\ download oder scannen Sie den QR-Code.

3. Geben Sie die Artikelnummer des Brenners auf Ihrem Typenschild ein, (siehe Bild) und wählen Sie die Sprache aus.

Detaillierte Informationen zum Ecodesign können unter www.bentone.com/ecodesign heruntergeladen werden.

Table of contents

1. General Information 4
1.1 Delivery inspection 4
1.2 Safety 4
1.3 What to do if you smell gas 5

2. Technical data 6
2.1 Dimensions BG 550-2 6
2.2 Capacity range 7
2.3 Gas categories, approved gases 7
2.4 Technical specification 7
2.5 Working field 8
2.6 Components BG 550-2 9
2.7 Skeleton diagrams 11

3. Electric equipment 12
3.1 Safety system 12
3.2 Components 12
3.3 Wiring diagram BP S4 13

4. Control 14
4.1 Technical data 14
4.2 LED indicator lamps 14
4.3 Explanation of the different sequence modes 15
4.4 BurnerPro LED fault/lock code table 16

5. Installation 20
5.1 General instructions 20
5.2 Instructions 20
5.3 Inspection and maintenance 20
5.4 Preparation for assembly 20
5.5 Gas supply 20
5.6 Electric connection 20
5.7 Handling and lifting instruction 21

6. Mounting 22
6.1 Gas nozzle 23
6.2 De-aerating 24
6.3 Leakage control 24
6.4 Calculation of gas flow 25

7. Settings 26
7.1 Setting the combustion assembly 26
7.2 Startup 26
7.3 Control of combustion 26
7.4 Setting the air pressure switch 27
7.5 Setting the gas pressure switch, min 28
7.6 Settings Damper motor, 2-stage 29

8. Gas valve, MultiBloc ZRDLE 405-415....B07 30
8.1 Mounting closed position indicator (CPi) 31
8.2 Flow adjustment 2-stage design 32
8.3 Adjustment of pressure governor 32
8.4 Adjustment of of main valve damper 32

9. Service 33
9.1 Burner Service Schedule, Gas 33
9.2 Component replacement intervals 33
9.3 Combustion device 34
9.4 Air damper 35
9.5 Replacement, Damper motor air 36
9.6 Fan 37
9.7 Vibrations 38
9.8 Flame monitoring and ionisation current check (Continuous operation) 39
9.9 UV-5 (only intermittent operation) 39
9.10 Replacement of electrical components 40

10. Handing over of the installation 41

11. Troubleshooting 42

12. Service- and inspection protocol 44

1. General Information

The burner may only be used for its intended purpose in accordance with the product's technical data.

We reserve the right to make design changes and cannot be held liable for any misprints or typographical errors.

Modifying the design or using accessories or components that have not been approved by Enertech in writing is strictly prohibited.

This Installation and Maintenance manual:

- is to be regarded as part of the burner and must always be kept near the installation site.
- must be read prior to installation.
- is intended for use by authorised personnel.

1.1 Delivery inspection

- Make sure everything is delivered and the goods have not been damaged during transit. Transport damage should be reported to the shipping company.
- If something is wrong with a delivery, report it to the supplier.

1.2 Safety

- before installation:



- Installation and work on the burner and associated system components may only be carried out by persons who have undergone relevant training.
- The product is packaged to prevent damage from occurring when handled – Handle the product with care! Lifting equipment must be used to lift larger packages.
- The products must be transported/stored on a level surface in a dry environment, max. 80% relative humidity, no condensation. Temperature -20 to +60 °C.

- installation:

- The burner must be installed in accordance with local regulations for fire safety, electrical safety, and fuel distribution.
- The premises must comply with local regulations pertaining to use of the burner and must have adequate air supply.
- The installation site must be free of chemicals.
- Fire extinguisher with Class BE recommended.
- Make sure when installing the burner that there is enough space to service the burner.
- The electrical installation must be professionally carried out in accordance with current mains electricity regulations and in a professional manner.
- Make sure that the burner is suitable for the application (see Technical Data).
- All components must be installed without being bent, twisted or subjected to mechanical or thermal forces that affect components.

- Care must be taken by the installer to ensure that no electrical cables or fuel lines are pinched or otherwise damaged during installation or service.
- Sharp edges can occur on, for example: flame tube, fan wheel and air damper.
- The gas outlet from the pressure regulator must be configured in accordance with applicable regulations and lead to a safe area.

- before first start:

- The burner must not be put into operation without proper safety and protection devices.
- Permitted ambient temperature during operation -10 to +60 °C. Max. 80% relative humidity, no condensation.
- The surface temperature of the burner's components may exceed 60 °C.
- Handle with caution – the burner has moving parts, and there is risk of crushing injuries.
- Seal inspections must be performed during installation and servicing to prevent leakage.
- Fitting and installation work has been completed and approved.
- Electrical installation has been correctly performed.
- Flue gas ducts and combustion air ducts are not blocked.
- All actuators and control and safety devices are in working order and correctly set.
- If the boiler is equipped with an access hatch, this must be equipped with a hatch opening switch connected to the burner's safety system.
- When in operation, the burner's noise level can exceed 85 dBA – use hearing protection!

- Operation:

- Carry out all stipulated settings, service and inspection work within the set time.

1.3 What to do if you smell gas

- Turn off the fuel supply.
- Turn off the device and remove the boiler from operation.
- Open windows and doors.
- Prevent open flames or sparking, e.g. do not turn lights on or off, do not use any electrical appliances or mobile phones.
- Evacuate the building.
- Notify the installer or gas supplier of the problem so that it can be rectified.



2. Technical data

The burner is intended for:

- Operation in installations according to EN 303 and EN 676.

Fuels:

- Natural gas H, E, L, LL.
- LPG, Butane and Propane.

2.1 Dimensions BG 550-2

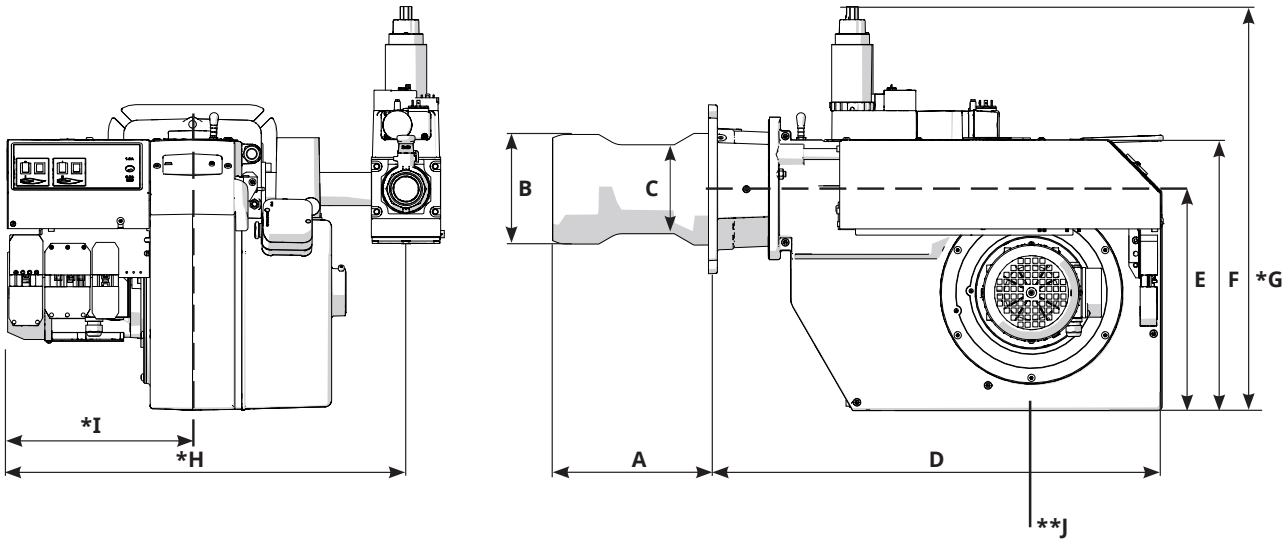

Length of flame tube	Flame tube measure A	Flame tube measure B	Flame tube measure C
256	226	ø 160	ø 162
356	326	ø 160	ø 162
456	426	ø 160	ø 162

D	E	F	G	H	I	J
660	320	400	*590	*743	*343	**200

* The above dimensions are max. measurements. Depending on the components used, the measurements may vary.

** Min. recommended distance to floor.

2.1.1 Measurements for connection to the boiler

K	L	M
12	(210) 255-290	Ø 170

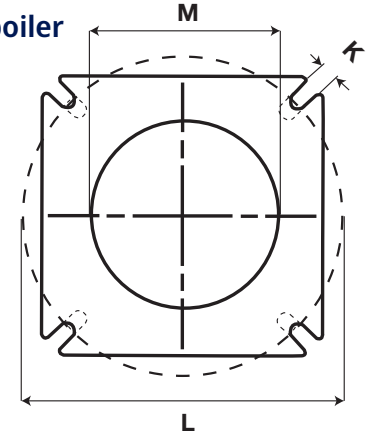

172 535 74-1 2023-03-01

2.2 Capacity range

Capacity kW		Gas quantity at min. power Nm³/h	Gas quantity at max. power Nm³/h	Max. connection pressure mbar	Nominal connection pressure mbar
BG 550					
G20	140 - 650	14.8	68.8	360	See data plate.
G25	140 - 600	17.2	73.8	360	
G30	140 - 628	4.3	19.5	360	
G31	140 - 628	5.7	25.7	360	

160302-232-2

Gas quantity and capacity vary according to grade of gas and connection pressure.

2.3 Gas categories, approved gases

Only dry gas is permitted for use.

Category	Country of destination	Supply pressure
II_{2R3R}	AT, BE, BG, CH, CY, CZ, DE, DK, EE, ES, FI, FR, GB, GR, HR, HU, IE, IS, IT, LT, LU, LV, MK, MT, NL, NO, PL, PT, RO, RS, SE, SI, SK, TR	30 mbar
$II_{2H3B/P}$	AT, CH, CY, DK, FI, LT, RO, SE, SK	30 mbar
II_{2H3P}	GB, IE	30 mbar
$II_{2L3B/P}$	NL, RO	30 mbar
$II_{2E3B/P}$	PL	30 mbar
$I_{2E(R)B}$	BE	30 mbar
I_{3P}	BE	30 mbar

160302-233-3

2.4 Technical specification

	BG 550-2
Main supply, Operation [1) 2)]	230V, 1~, 0.8A, 50Hz, IP20
Main supply, Motor [1)]	230/400V, 3.1/1.8A
Max fuse rating, Motor	6.3A
Max fuse rating, Operating	C10A
NO_x-class	2
Noise level	90dBA

[1)] Max operating current, see data plate.
[2)] Motor excluded.

Measurements according to EN 15036-1:2006

Alt.1 The noise level of the burner can be reduced by equipping the burner with silencer. Installation must be done so it does not prevent air supply to the burner.

Alt.2 The burner's noise level can be reduced by connecting the burner's air intake to the air duct that opens into an appropriate location. Installation must be done so it does not prevent air supply to the burner.

2.5 Working field

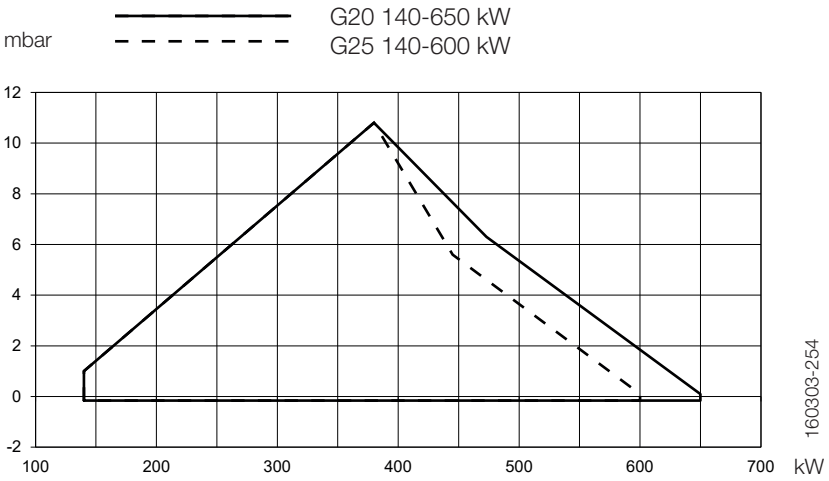

> **!** Do not exceed working field.

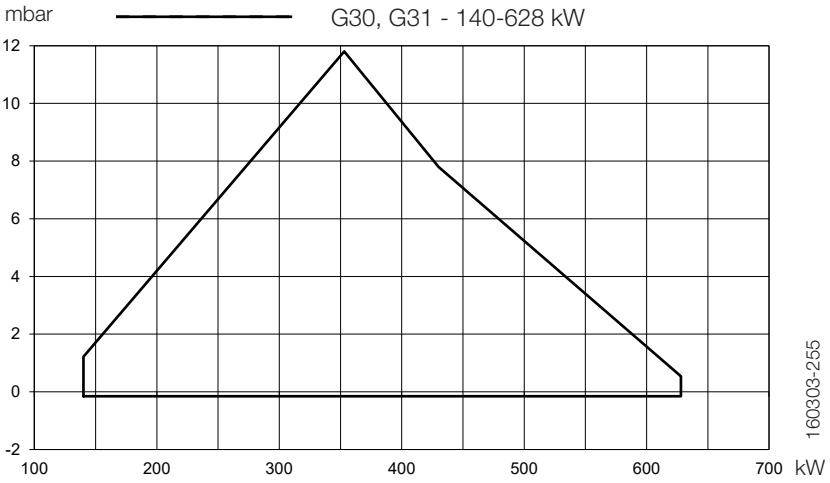

2.6 Components

1. Flame tube
2. Fixing flange
3. Guides
4. Fan wheel
5. Gas pressure switch, min
6. Brake plate
7. Ignition electrode
8. Nozzle
9. Ionisation electrode
10. Motor
11. Connection, gas
12. Transformer
13. Air damper
14. Damper motor
15. Air pressure switch
16. Fuse holder
17. Indication lamp, Stage 2
18. Power switch I-II
19. Indication lamp, Stage 1
20. Power switch 0-I
21. Contactor + Overload protection
22. Burner Control
23. Gas fittings
24. Gas valve (MultiBloc)

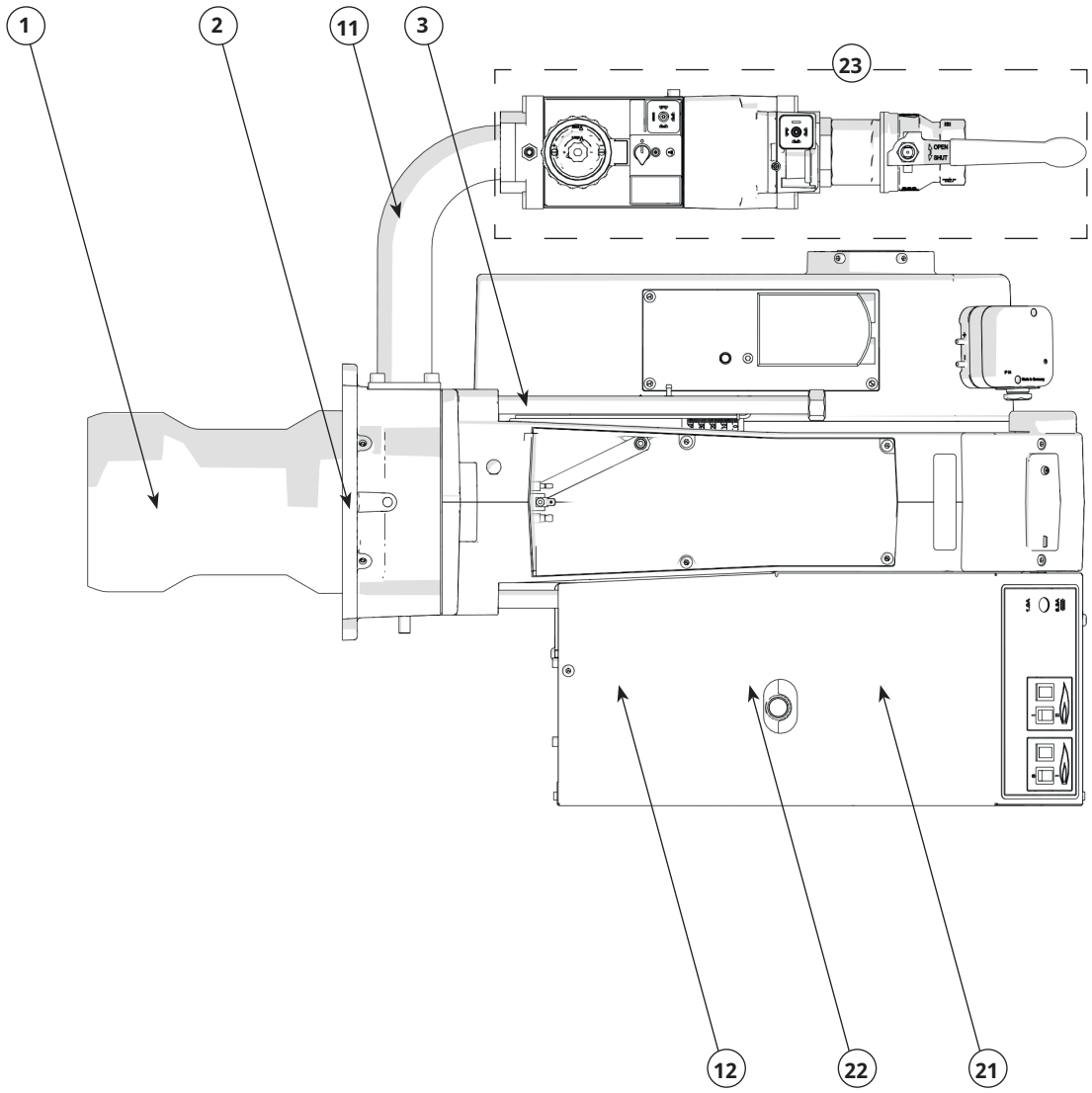

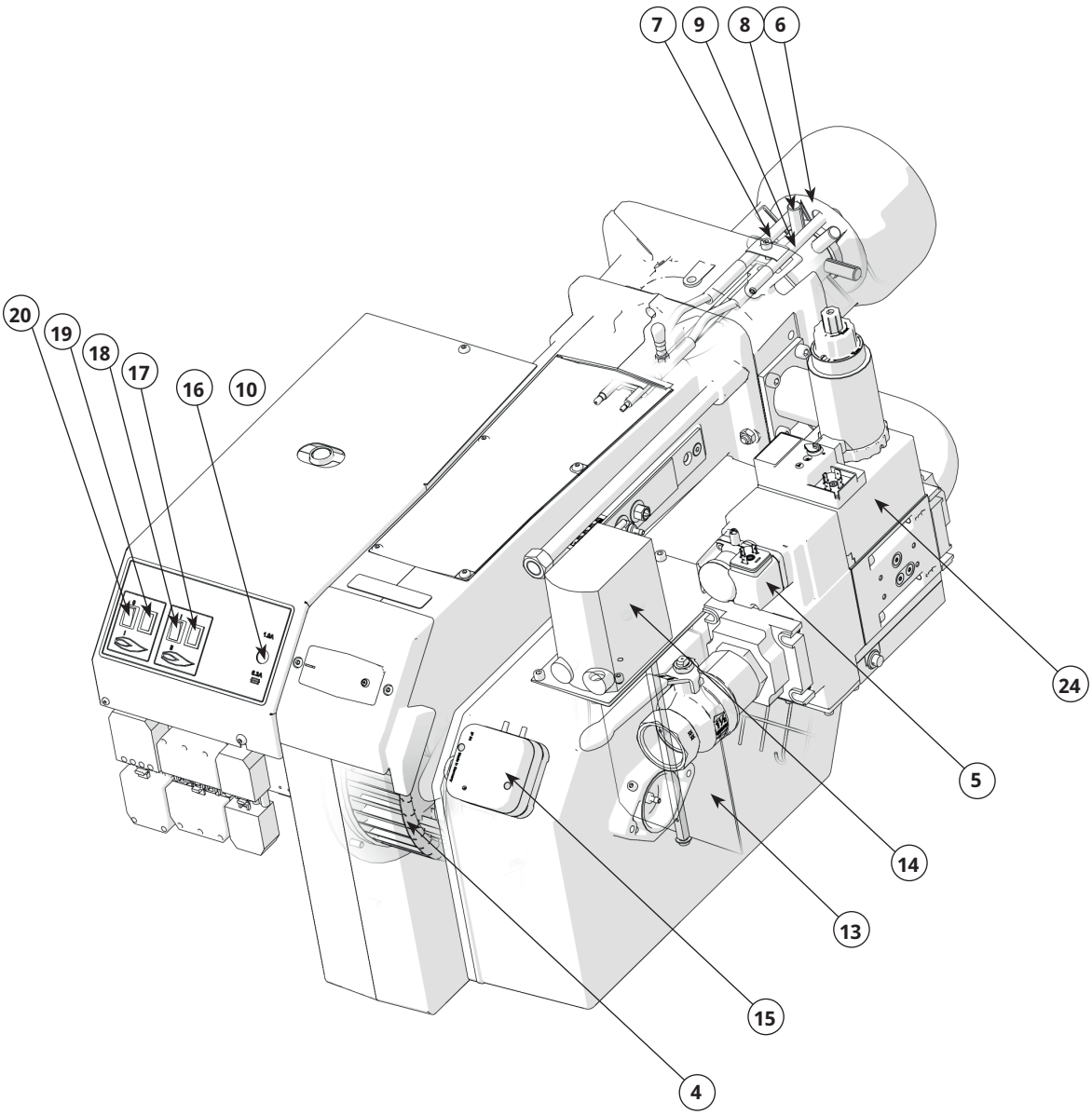
7
9
8
6
20
19
18
17
16
10
24
5
14
13
15
4

2.7 Skeleton diagrams

1. Ball valve
2. Filter
3. Governor
4. Pressure gauge with shut-off cock

5a. Gas pressure switch, min

5b. Gas pressure switch, max

6a. Main valve, 2 -stage.
In modulaing operation, this valve is equipped with controls for variable opening.

6b. Safety valve

7. [1)] Valve proving system

8. Damper motor
9. Air pressure switch
10. Gas burner control
11. Ventilation pipe for releasing gas
12. Solenoid V3

Pos. 5b, 7: Components not required according to EN 676.

[1)] Required over 1200 kW according to EN 676.

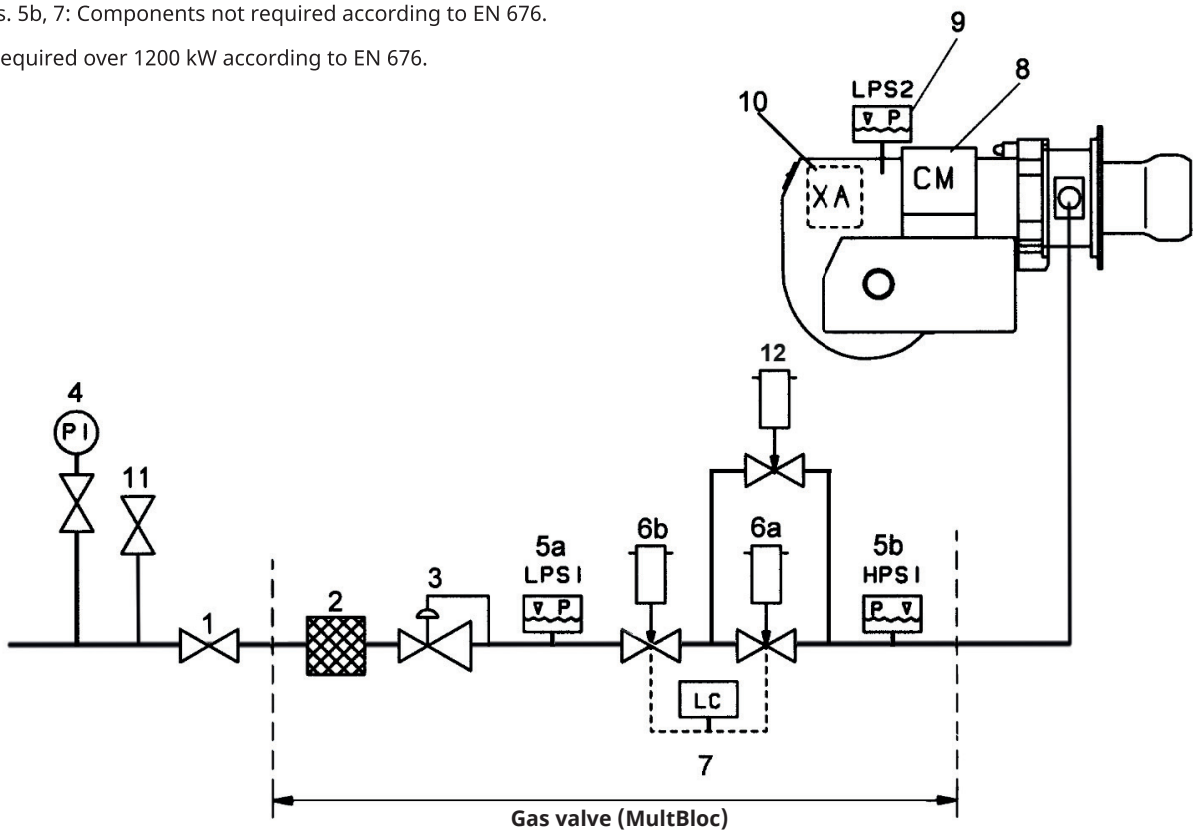

3. Electric equipment

3.1 Safety system

The safety system (safety switch for hatches, doors, water level, pressure, temperature and other safety devices) must be installed in the safety circuit in accordance with current regulations for the system.

The cables of the safety system must be separated so that the outgoing signal is not placed in the same cable as the incoming signal.

Mains connection and fuse in accordance with local regulations.

3.2 Components

A1	Burner control	S5	Safety switch
B1	Ionisation electrode	S6	Control thermostat, Stage 2
F1	Fuse	S7	Main switch
F2	Fuse	S8	Air pressure switch
H1	Lamp, low load	S9	Gas pressure switch, min
H2	Indicator lamp, Stage 2	T1	Ignition transformer
H3	Alarm signal 230V	X1	Connection block
K1	Contactor + Overload protection	X2	Earth terminal
M1	Motor	X3	Plug-in contact, burner
M2	Damper motor	X4	Plug-in contact, boiler
P1	Time counter, Stage 1/Operation	X5	Plug-in contact, stage 2, burner
P2	Time counter, Stage 2	X6	Plug-in contact, stage 2, boiler
R1	UV-detector	X7	Plug-in contact, 3 phase, burner
S1	Operating switch	X8	Plug-in contact, 3 phase, boiler
S2	Operating switch, Stage 2	Y1	Solenoid valve 1
S3	Control thermostat	Y2	Solenoid valve 2
S4	Temperature limiter	Y3	Solenoid valve 3

172 615 78-3 2023-03-01

3.3 Wiring diagram BP S4

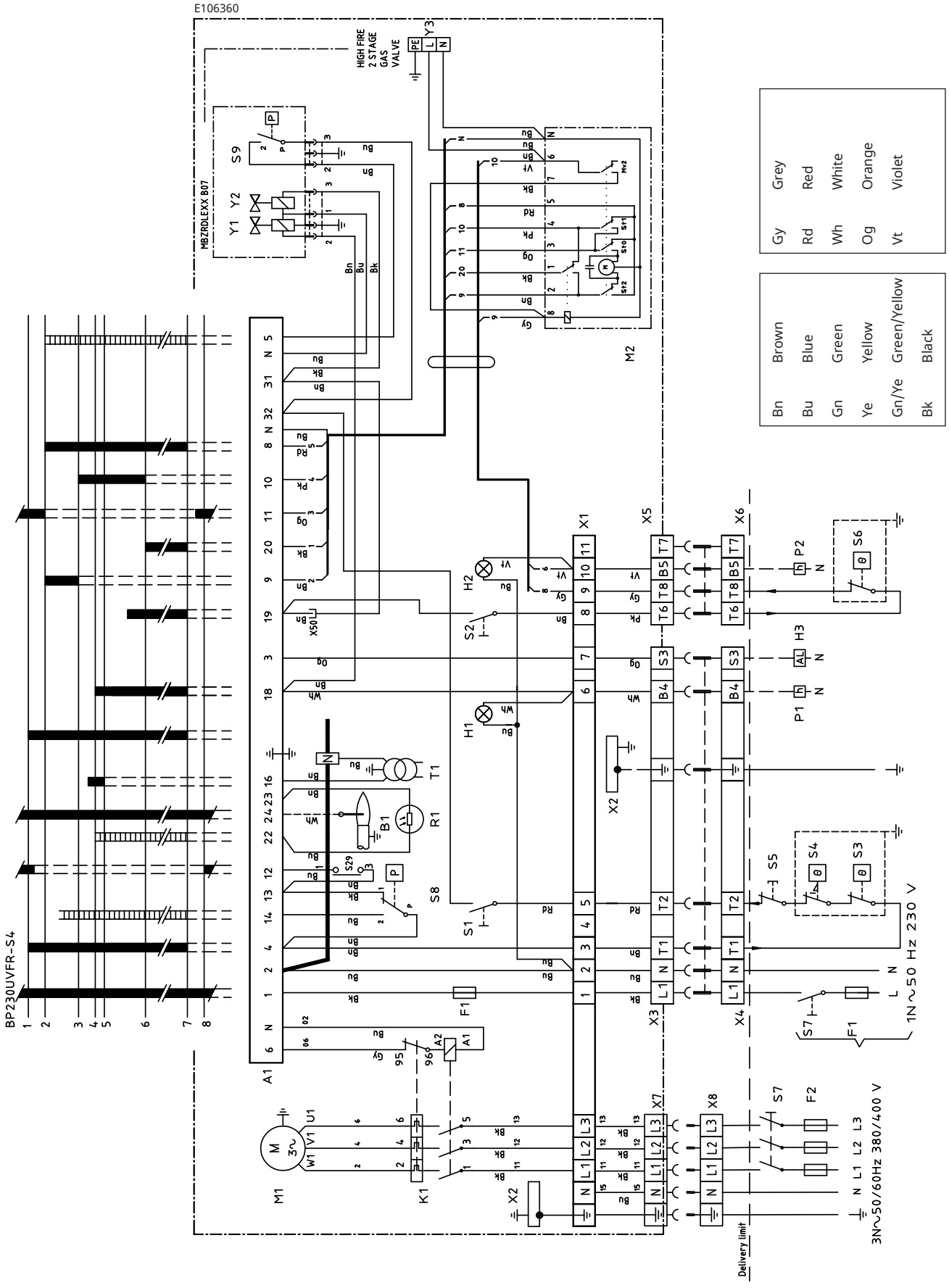

4. Control

	BP230UVFR-S2	BP230UVFR-S3	BP230UVFR-S4
Pre-purge time (t1)	30.7 s	37.2 s	60 s
Pre-ignition time (t3)	6 s	2.5 s	2.5 s
Safety time (TSA)	3 s	5 s	5 s
Post-purge time (t6)	16.8 s	14.9 s	15 s
Reaction time for low interrupt	1 s	1 s	1 s
Ambient temperature BP	-40 to +60 °C	-40 to +60 °C	-40 to +60 °C
Ambient temperature UV5	-20 to +60 °C	-20 to +60 °C	-20 to +60 °C
Max. current, terminals 6-7	2 A	2 A	2 A
Max. current, other terminals	1 A	1 A	1 A
Ionisation current	3-10 µA	3-10 µA	3-10 µA

4.1 Technical data

4.2 LED indicator lamps

BurnerPRO's burner control has seven LEDs which indicate the operating status of the control unit and the cause of the lockouts.

Each LED has an icon describing its function.

	FAN	Lights up when voltage is supplied to the fan motor (terminal 6)
	OPEN DAMPER 6	Flashes when the damper motor runs to maximum position. When the switch for the maximum damper motor position closes, this LED will light continuously.
	CLOSE DAMPER 5	Flashes when the damper motor runs to minimum position. When the switch for the minimum damper motor position closes, this LED will light continuously.
	AUTO 4	Lights up when the Burner control is in normal operating mode.
	IGNITION 3	Indicates ignition
	FLAME 2	Lights up when a flame is detected by the flame detector.
	ALARM/STATUS	In lockout mode, the Alarm lamp lights up and the other LEDs light up to indicate lockout. Refer to "Fault codes".

The LEDs can show the flame strength in Control mode by pressing the reset button for 3 seconds when the Flame LED flashes during start-up. In Control mode, the Status LED shines yellow, the Fan LED flashes, and LEDs 2-6 show the flame signal strength. Each LED corresponds to 20% of the total flame signal. 5 lit LEDs correspond to 100% and 2 LEDs correspond to 40%.

4.3 Explanation of the different sequence modes

1. **Operation**
   This is the control unit voltage supply.
2. **System test**
   In this status mode, the control unit undergoes an internal test to verify correct functionality of the hardware and software.
3. **Preconditions for burner start-up**
   The control unit verifies that the air pressure switch is in the depressurised position and a test of the fuel cut-off valve is carried out.
4. **Heating requirement**
   The operating thermostat closes and voltage is supplied to connection 5 so that the control unit can start the burner.
5. **Pre-purge begins**
   The control unit starts the fan.
   Connections 6 and 7.
6. **Damper motor opens**
   Control unit connection 9 sends a command to the damper motor to run at Max. mode. The control unit detects that the damper motor's end position switch indicates successful transition to the Max. load mode by supplying voltage to the connection 8 input. The control unit also performs a test to ensure that the air sensor detects airflow by monitoring connection 14.
7. **Pre-purge**
   The combustion chamber is ventilated.
8. **Damper motor closes**
   Following pre-purge, the control unit closes connection 10. The control unit detects that the damper motor is in the Low Load mode by supplying voltage to connection 8 on the control unit.
9. **Ignition on**
   The control unit supplies voltage to the ignition transformer by activating connection 16.
10. **Fuel on** The control unit activates the fuel valve by supplying voltage to connections 17 and 18 as well as to direct ignition systems.
11. **Flame indication**
    Ignition transformer turns off. The flame signal is tested during this stage. If no flame is detected, the burner enters Lockout mode.
12. **Operating mode**
    Once a flame is stable, the control unit transitions to Operating mode. There must be a flame signal. Voltage is supplied to connection 20.
13. **Shutdown**
    Shutdown occurs when the heating requirement is met and power is cut off to the operating thermostat connection 5 . The control unit closes the fuel valves by cutting off power to outputs 18 and 20. The fan post-purges the combustion chamber.
14. **Lockout**
    The control unit enters lockout mode when an internal or external fault is detected. The reset button and the remote-reset connection can be used to disable Lock mode. However, the control unit will revert to lockout mode if the fault is not rectified.

Burner Lockout

When lockout occurs, the LEDs indicate the cause. The control unit status is saved in the memory, even in the event of a power outage. By pressing the manual reset button on the control unit or remote reset.

> **!** Note! At remote reset: maximum 5 reset attempts within a 15 min period, after which qualified personnel must examine the burner before further reset attempts are made.

4.4 BurnerPro LED fault/lock code table

NO.	FAULT	LED 1	LED 2	LED 3	LED 4	LED 5	LED 6	LED 7	POSSIBLE SOLUTION
	OPERATION LED ● = ON	Fan	Open damper	Closed damper	Auto	Ignition	Flame	Status	
	ICON								
1	DIAGNOSTIC ERROR, MAIN MCU INLET	●						RED	Initial diagnostic error. Ensure correct status of inputs and outputs when the unit is turned on.
2	LOCAL RESET		●					RED	User-initiated manual reset/lockout or defective reset switch.
3	AIR SENSOR	●	●					RED	Air sensor signal [connection 14] could not be detected by the end of the safety time, or loss of the air sensor signal during burner operation
4	DIAGNOSTIC ERROR			●				RED	“The system detected voltage at terminal 16, 17, 18, or 19 at the incorrect time, or no voltage detected when necessary. Check cabling and makes sure the system is running on a single line phase (50/60Hz)”
5	IONISATION FLAME LOSS	●		●				RED	Flame loss. Inspect the system, check the gas pressure, flame detector, cabling, etc.
6	IONISATION CIRCUIT FAULT		●	●				RED	Replace the control unit. Contact reseller/distributor.
7	INTERNAL COMMUNICATION ERROR	●	●	●				RED	Reset the system to continue normal operation. Contact reseller/distributor if the fault persists.
8	REMOTE RESET				●			RED	The user has pressed Remote Reset or the remote controller has short-circuited.
9	IONISATION FAULT	●			●			RED	Replace the control unit. Contact reseller/distributor.
10	MAIN PROGRAM SEQUENCE ERROR		●		●			RED	Replace the control unit. Contact reseller/distributor.
11	RAM TEST	●	●		●			RED	Replace the control unit. Contact reseller/distributor.
12	PROGRAM SEQUENCE ERROR			●	●			RED	Replace the control unit. Contact reseller/distributor.
13	READING ERROR INPUT	●		●	●			RED	Check cabling and makes sure the system is running on a single phase (50/60Hz)
14	TIMER2 ERROR		●	●	●			RED	Replace the control unit. Contact reseller/distributor.
15	CPU TEST FAILED	●	●	●	●			RED	Replace the control unit. Contact reseller/distributor.

NO.	FAULT	LED 1	LED 2	LED 3	LED 4	LED 5	LED 6	LED 7	POSSIBLE SOLUTION
16	FLAME LOSS	●				●		RED	Visually inspect the flame detector and confirm that the pilot light was lit during start-up. Check the fuel supply system.
17	CABLE FAULT		●			●		RED	The system detected voltage at terminal 16, 17, 18, or 19 at the incorrect time, or no voltage detected when necessary. Check cabling and makes sure the system is running on a single phase (50/60Hz)
18	SAFETY RELAY FAULT	●	●			●		RED	Replace the control unit. Contact reseller/distributor
19	FUEL VALVE OPEN			●		●		RED	Check fuel valve cabling. The valves may not be fully closed.
20	FLAME LOSS	●		●		●		RED	Visually inspect the flame detector and confirm that the main flame was lit during start-up. Check the fuel supply system.
21	WELDED SAFETY RELAY		●	●		●		RED	Replace the control unit. Contact reseller/distributor.
22	SELF TEST	●	●	●		●		RED	Replace the control unit. Contact reseller/distributor.
23	ROM ERROR				●	●		RED	Replace the control unit. Contact reseller/distributor.
24	FLAME LOSS DURING OPERATION	●			●	●		RED	Check the cabling. Check the flame detector. Check the fuel supply system.
25	RAM ERROR		●		●	●		RED	Replace the control unit. Contact reseller/distributor.
26	INTERNAL FAULT	●	●		●	●		RED	Replace the control unit. Contact reseller/distributor.
27	NOT USED								
28	NOT USED								
29	AMBIENT TEMPERATURE		●	●	●	●		RED	Ambient temperature below -40 °C or above 70 °C
30	ROM ERROR	●	●	●	●	●		RED	Replace the control unit. Contact reseller/distributor.
31	IONISATION SHORT-CIRCUIT						●	RED	Possible external short-circuit between terminals 23 and 24. Contact reseller/distributor if the fault persists.
32	TIME LIMIT EXCEEDED FOR CONTROL MODE	●					●	RED	30-minute activation time passed.
33	STANDBY FALSE FLAME		●					RED	False flame detected in Standby mode.
34	NOT USED							RED	
35	INTERNAL RESET			●			●	RED	Internal software reset of control unit. Contact reseller/distributor if the fault persists.

NO.	FAULT	LED 1	LED 2	LED 3	LED 4	LED 5	LED 6	LED 7	POSSIBLE SOLUTION
36	SOFTWARE RESET	●		●			●	RED	Internal software reset of control unit. Contact reseller/distributor if the fault persists.
37	WAITING TIME INPUTS		●	●			●	RED	The system was unable to perform airflow sensor test and/or valve closure test. Check the cabling. Check the air sensor and/or fuel valve switch.
38	INTERNAL RESET	●	●	●			●	RED	Internal software reset of control unit. Contact reseller/distributor if the fault persists.
39	SOFTWARE RESET				●		●	RED	Internal software reset of control unit. Contact reseller/distributor if the fault persists.
40	HARDWARE RESET	●			●		●	RED	Replace the control unit. Contact reseller/distributor if the fault persists.
41	HARDWARE RESET		●		●		●	RED	Replace the control unit. Contact reseller/distributor if the fault persists.
42	CONTROL PROGRAM FROZEN	●	●		●		●	RED	Replace the control unit. Contact the distributor/factory.
43	CONTROL PROGRAM FROZEN			●	●		●	RED	Replace the control unit. Contact reseller/distributor.
44	TIMER2 ERROR	●		●	●		●	RED	Replace the control unit. Contact reseller/distributor.
45	LOW VOLTAGE ERROR		●	●	●		●	RED	Check mains power. Contact reseller/distributor if the fault persists.
46	LOW VOLTAGE ERROR	●	●	●	●		●	RED	Check mains power. Contact reseller/distributor if the fault persists.
47	UV DETECTION FAULTY					●	●	RED	Replace the control unit. Contact reseller/distributor.
48	INTERNAL FAULT	●				●	●	RED	Replace the control unit. Contact reseller/distributor.
49	INTERNAL FAULT		●			●	●	RED	Replace the control unit. Contact reseller/distributor.
50	IGNITION FEEDBACK	●	●			●	●	RED	The system detected voltage at terminal 16 at the incorrect time, or no voltage. Check cabling and ensure sufficient earthing.
51	PILOT FEEDBACK			●		●	●	RED	The system detected voltage at terminal 17 at the incorrect time, or no voltage. Check cabling and ensure sufficient earthing.
52	MAINP FEEDBACK	●		●		●	●	RED	The system detected voltage at terminal 19 at the incorrect time, or no voltage. Check cabling and ensure sufficient earthing.
53	WAITING TIME FEEDBACK LIMIT EXCEEDED		●	●		●	●	RED	Loss of feedback from the damper motor for more than 10 minutes. Check the cabling. Check the damper motor.
54	MAIND FEEDBACK	●	●	●		●	●	RED	The system detected voltage at terminal 18 at the incorrect time, or no voltage. Check cabling and ensure sufficient earthing.
55	DIAGNOSTICS INTERRUPTED				●	●	●	RED	Replace the control unit. Contact reseller/distributor.

NO.	FAULT	LED 1	LED 2	LED 3	LED 4	LED 5	LED 6	LED 7	POSSIBLE SOLUTION
56	UV FALSE FLAME			●	●	●	●	RED	False flame detected prior to ignition. Check the cabling. Check the flame detector. Ensure sufficient earthing.
57	IONISATION FALSE FLAME			●	●	●	●	RED	False flame detected prior to ignition. Check the cabling. Check the flame detector. Ensure sufficient earthing.
58	OPEN FEEDBACK READING		●	●	●	●	●	RED	The system detected voltage at terminal 8 at the incorrect time, or no voltage. Check cabling and ensure sufficient earthing.
59	ADJACENT POLE SHORT-CIRCUIT	●			●	●	●	RED	Replace the control unit. Contact reseller/distributor.
60	LOCAL RESET	●	●	●	●	●	●	RED	The local reset button has been pressed in for more than 10 seconds, or the reset button is stuck.
61	FUEL VALVE OPEN		●		●	●	●	RED	Fuel valve open at incorrect time.
62	STRONG UV FLAME	●	●		●	●	●	RED	Flame detector too close to the flame. Increase the distance between the flame detector and the flame.
63	INTERNAL FAULT					●		RED	Replace the control unit. Contact reseller/distributor.

5. Installation

5.1 General instructions

Installation must be carried out in accordance with current regulations and instructions.

The supplier/installer of the facility is obliged to familiarize himself with all regulations so that the installation meets the requirements of the local authorities.

Installation, assembly and settings must be performed to obtain the best possible function. Only gas intended for the gas burner may be used.

5.2 Instructions

It is the installer's responsibility to instruct the user in detail in the functions of the gas burner and the entire system.

5.3 Inspection and maintenance

The system must be maintained at the interval specified in the service schedule. If the burner is in a dirty environment, service should be done at more frequent intervals.

5.4 Preparation for assembly

Check that the burner's dimensions and capacity range match the current boiler. The power information on the type plate refers to the burner model's min. and max. effect.

5.5 Gas supply

In order to obtain good operational safety, it is important that the installation of the gas distribution system is carried out correctly, considering the following:

- Check that the burner is approved for the gas quality of the installation.
- Check that the burner gas components are approved for the specified gas pressure, see type plate.
- Installation must be carried out in accordance with current standards.
- Pipe lines should be assembled so that service can easily be performed on the boiler and burner.
- Pipe lines should be assembled so that any contaminants do not come into contact with the gas components.

5.6 Electric connection

- Before work on the electrical connection, the current must be disconnected so that the installation is isolated.
- Connection must be done in accordance with the applicable regulations.
- Connection must conform to the wiring diagram.

! **If any electrical connection other than that recommended by Enertech is used, there is a risk of property damage and personal injury.**

172 535 09-2

5.7 Handling and lifting instruction



Lifting kits can be purchased as accessories.



172 515 34

9. Mounting

Mount the burner to the boiler using 4 bolts (if new fixing holes need to be drilled, use the fixing flange as a template).

Separate the fixing flange from the fan housing as follows:

1. Remove cover of fan housing (A), disconnect ignition and ionizing cables and the control arm (B) from nozzle assembly.
2. Disconnect the electrical cable to the gas valve.
3. Loosen nuts on both sides of the fixing flange.
4. Loosen end stop (C) for guides.
5. Pull the fixing flange with flame tube, nozzle assembly and gas fitting out of the fan housing.
6. Check that the ignition electrodes are correctly set, see chapter Gas nozzle.
7. Fit the enclosed gasket to the flame tube.
8. Screw the fixing flange and the enclosed gasket onto the boiler, lift the fan housing onto the guides and mount in reverse order.
9. Connect the gas line, connect the supply cable, operating and safety circuits.

Before obtaining access to electrical and fuel line components all supply circuits must be disconnected.

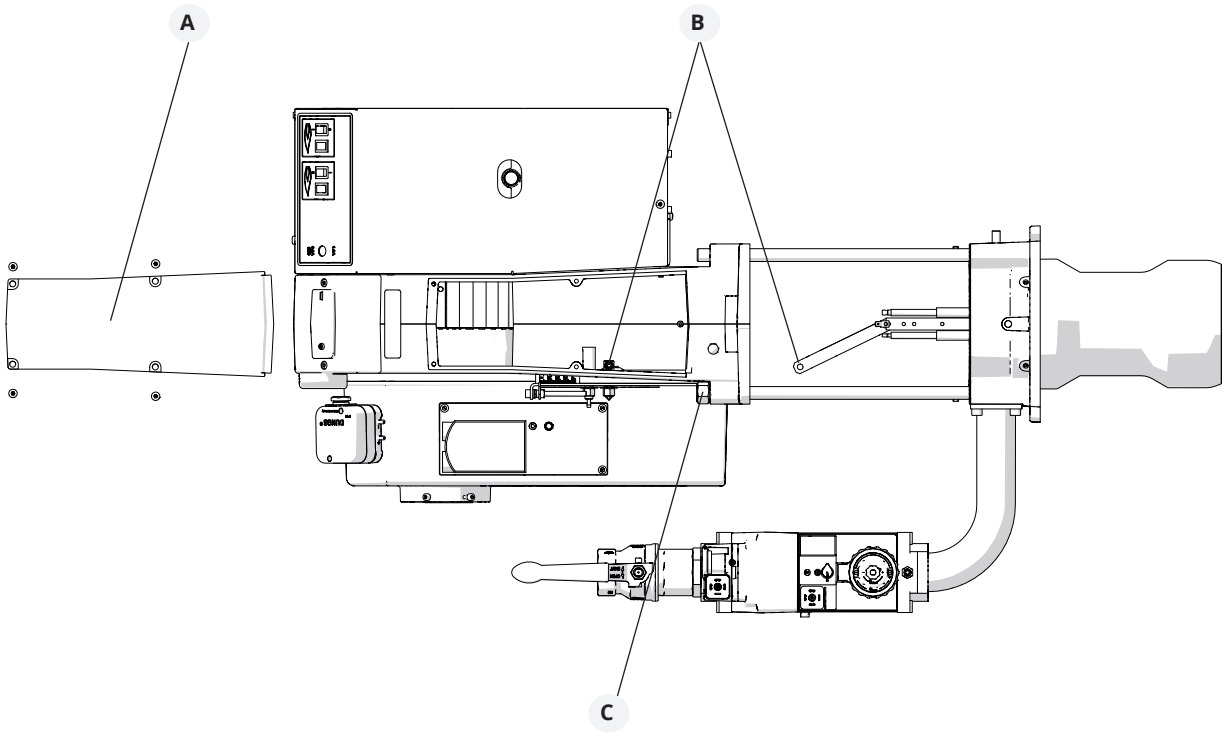

9.1 Gas nozzle

Check that the ignition electrodes are correctly set before mounting on the boiler.

Natural gas

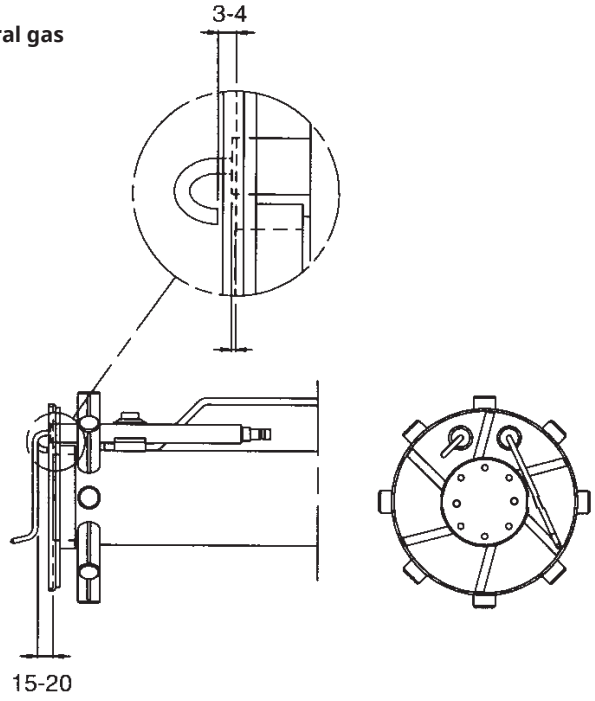

Propane

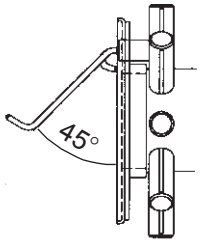

Biogas (UV detector)

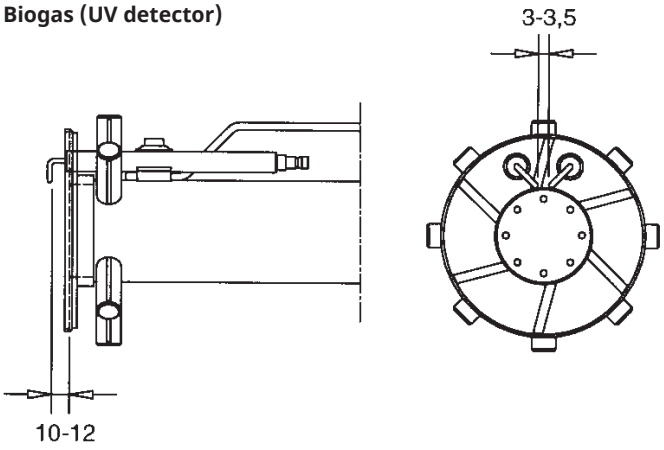

9.2 De-aerating

De-aerating the gas line by closing the tap to the gas connection and unscrewing the screw on the measuring nipple for the connection pressure. Connect a plastic hose, open the tap and drain the gas in a safe place. When the de-aerating is completed, be sure to refit the screw on the measuring nipple.

9.3 Leakage control

When checking for leakage, the solenoid valve must be closed. A pressure gauge is connected to the measuring nipple ”Pa”, see picture. The test pressure in the system must not be higher than max. connection pressure, see data plate. If leaks are found during measurement, locate the source using soapy water or leak detection spray. After sealing: check the leakage of the gas fixture again.

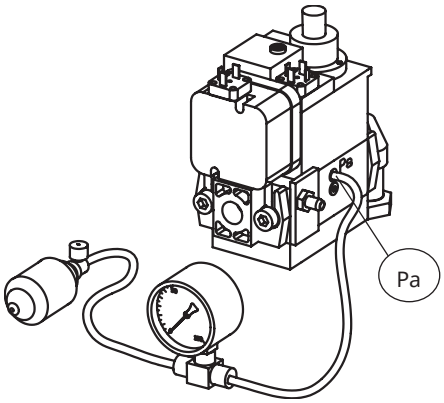

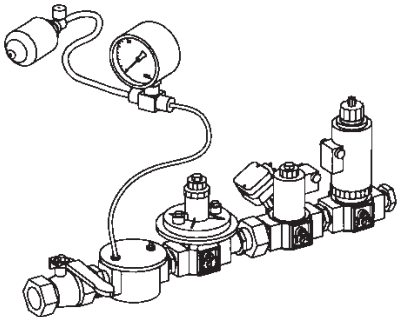

! Check for leaks in the gas line.

6.4 Calculation of gas flow

Formula symbol	Description	Example values
V_N	Standard gas volume [Nm3/h] Gas volume at normal condition 15 °C 1013 mbar	-
Q	Boiler output [kW]	450 kW
H_i	Lower calorific value of gas [kWh/m³] Natural gas under normal conditions 15 °C 1013 mbar, EN 676	9.45 kWh/m³
η	Boiler efficiency (e. g. 90%)	0.9
f	Conversion factor (pressure and temperature compensation)	-
t_{Gas}	Gas temperature at gas meter [°C]	15 °C
P_{Baro}	Barometric air pressure [mbar]	945 mbar
P_{Gas}	Pressure of gas at the gas meter [mbar]	20 mbar
V	Operating volume [m³/h]	-
VG	Gas flow measured at the gas meter [m³]	1.58 m³
T	Measuring time for consumed gas quantity [s]	97 s

Calculate standard volume using the following formula:

$$V_N = \frac{Q}{\eta \cdot H_i} \qquad V_N = \frac{450\ \text{kW}}{0.9 \cdot 9.45\ \text{kW/m}^3} = 52.9\ \text{m}^3/\text{h}$$

Calculate conversion factor using the following formula:

$$f = \frac{273}{273 + t_{Gas}} \cdot \frac{P_{Baro} + P_{Gas}}{1013} \qquad f = \frac{273}{273 + 15} \cdot \frac{945 + 20}{1013} = 0.90$$

Calculate gas volume using the following formula:

$$V = \frac{V_N}{f} \qquad V = \frac{52.9\ \text{m}^3/\text{h}}{0.90} = 58.6\ \text{m}^3/\text{h}$$

Determine operating volume with the following formula:

$$V = \frac{3600 \cdot V_G}{T} \qquad V = \frac{3600 \cdot 1.58\ \text{m}^3}{97\ \text{sek}} = 58.6\ \text{m}^3/\text{h}$$

Height above sea level [m]	0	100	200	300	400	500	600	700	800	900	1000	1100	1200
P_{Baro} [mbar]	1013	1001	989	977	966	954	943	932	921	910	899	888	877

Calorific value of the gas

Gas quality		kWh/Nm³	MJ/Nm³
Natural gas	G20	9.5	34.02
Natural gas	G25	8.2	29.25

Gas quality		kWh/Nm³	MJ/Nm³
Butan	G30	32.25	116.09
Propan	G31	24.44	88.00

Lower calorific value H_i at normal conditions 15 °C and 1013 mbar, EN 676.
For exact calorific value of the gas, contact the gas distributor.

172 535 24-2

7. Settings

7.1 Setting the combustion assembly

The burner is equipped with a lever that changes the position of the brake plate in the combustion head. This is used to set the correct pressure drop across the combustion assembly and thereby obtain good combustion without ripples.
Make the adjustment by turning screw X.

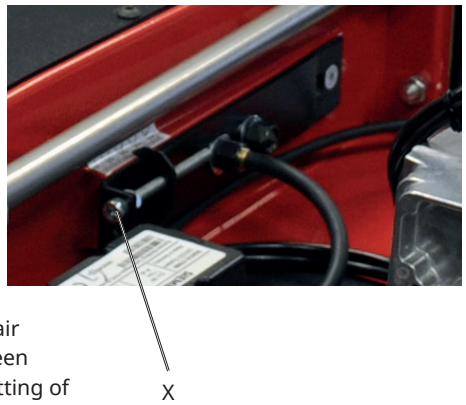

The best position is, among other things, dependent on the input power and overpressure in the boiler.

A general rule of thumb is that the smaller the capacity, the smaller the gap should be between the brake plate and the combustion assembly.

The position of the brake plate also has an impact on the quantity of air supplied for combustion. This means that once the brake plate has been adjusted, the combustion should be checked and, if necessary, the setting of the air damper adjusted to obtain good combustion.

A left turn opens the brake plate, providing a lower pressure drop and more air to the combustion process.

A right turn closes the brake plate, providing a higher pressure drop and less air to the combustion process.

7.2 Startup

After the burner has been mounted on the boiler and the electrical connection, de-aeration and tightness control have been performed, the burner is ready to start-up.

Read the sections dealing with settings of gas valve, damper motor and combustion device before start-up.

Open the ball valve and turn on the main switch, start the burner and begin setting up the system.

7.3 Control of combustion

Check combustion using flue gas analysis instruments. Set the burner to about 20% excess air and check that good combustion is obtained. Check the actual gas flow on the gas meter to ensure that the correct input power is achieved.

Recommended air excess at basic setting

Gas quality	Excess air flue gases		Max % CO_2
	% O_2	% CO_2 Lambda 1.2	
Natural gas	3 - 5	≈10	11.9
Propane	3 - 5	≈11.5	13.9
Butane	3 - 5	≈11.5	14.1
Liquefied petroleum gas	3 - 5	≈11	13.8
Biogas	3 - 5		

7.4 Setting the air pressure switch

The air pressure switch must block the burner if the amount of air for combustion becomes too low. The air pressure switch must be set so that in the event of a lack of air supply at the burner's max. or min. capacity reacts before the monitored pressure drops so much that poor combustion occurs.

1. Remove protective cover.

Be careful when adjusting the air pressure switch; it contains a live component.

2. Start the burner.
3. Carefully turn the scale on the air pressure switch clockwise until the air pressure switch stops the burner.
4. Measure and note the lowest air pressure in the entire work area.
5. Set the air pressure switch to about 10-15% lower than the lowest noted pressure.
6. Test run the burner and check the function in the entire work area.
7. Refit protective cover.



7.5 Setting the gas pressure switch, min.

The gas pressure switch must react to too low a connection pressure to the burner, prevent the burner from starting and stop the burner during operation. The burner may start again when the connection pressure has risen above the set pressure on the gas pressure switch.

1. Remove protective cover.
2. Open measuring socket and connect a manometer for measuring connection pressure.
3. Start the burner.
4. Measure and note the connection pressure to the burner at the highest input power.
5. Set the gas pressure switch to a value 10-15% lower than the noted pressure.
6. Check the setting by carefully closing the ball valve and at the same time measuring the connection pressure.
7. When the gas pressure switch stops the burner, the measured value must approximately correspond to the setting on the gas pressure switch.
8. Open ball valve.
9. Remove manometer and close measuring socket.
10. Refit protective cover.

Check gas tightness.

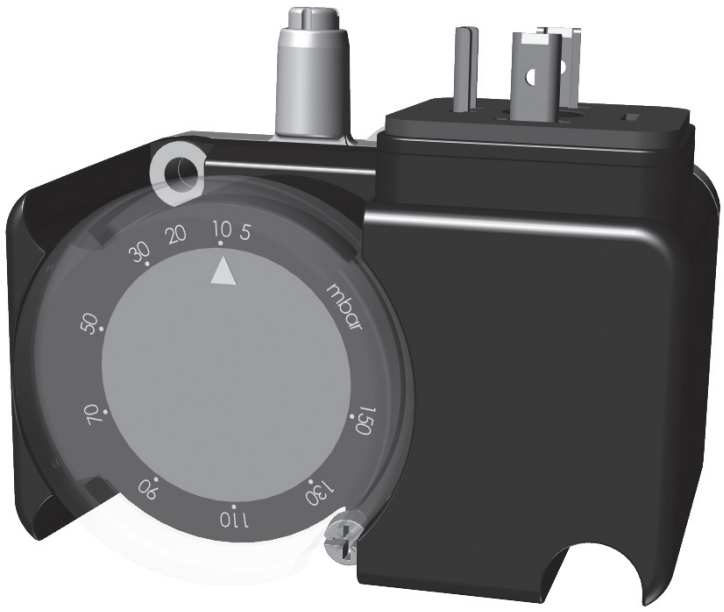

7.6 Settings Damper motor, 2-stage

Air adjustment

The damper motor rotates the air damper between three preset positions: completely closed, low load and high load. These positions are controlled in the motor by colored cam discs, the black cam disc controls the switching on/off of the solenoid valve. Adjust the amount of air by changing the position of the cam discs.

Blue cam disc is the limit position for closed air dampers and does not normally need to be changed.

Low load

- Set control switch for load position to position II (high load).
- Turn orange cam disc to 0° to reduce airflow and to 90° to increase airflow.
- Return the control switch to position I (low load) and check the combustion values.

High load

- Set control switch for load position to position I (low load).
- Turn red cam disc to 0° to reduce airflow and to 90° to increase airflow.
- Place black cam disc in a position between red and orange cam discs and adjust to obtain a good load change.
- Return the control switch to position II (high load) and check the combustion values.

Release

By pressing the button, the motor is disengaged and the air damper can be turned. The function is used when servicing air dampers.

Recommended excess air

Gas quality	Excess air flue gases		Max % CO_2
	% O_2	% CO_2 Lambda 1.2	
Natural gas	3 - 5	≈10	11.9
Propane	3 - 5	≈11.5	13.9
Butane	3 - 5	≈11.5	14.1
Liquefied petroleum gas	3 - 5	≈11	13.8
Biogas	3 - 5		

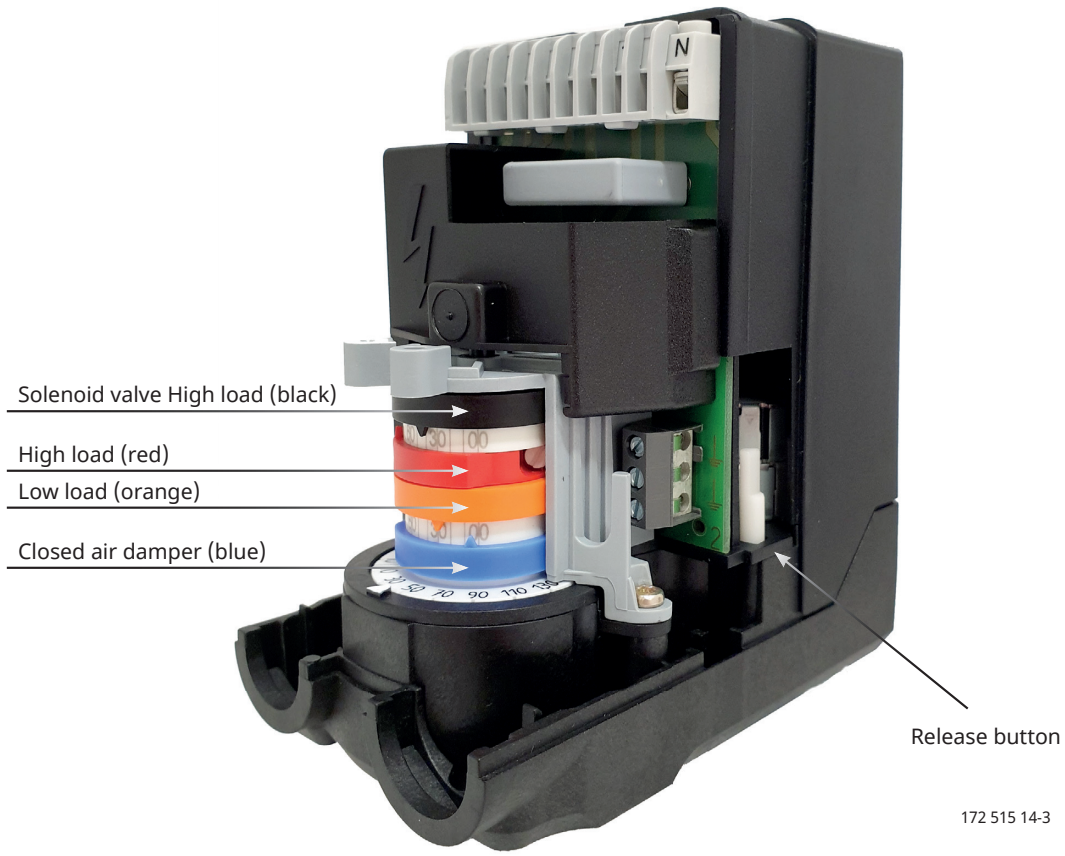

172 515 14-3 2022-10-27

8. Gas valve, MultiBloc ZRDLE 405-415....B07

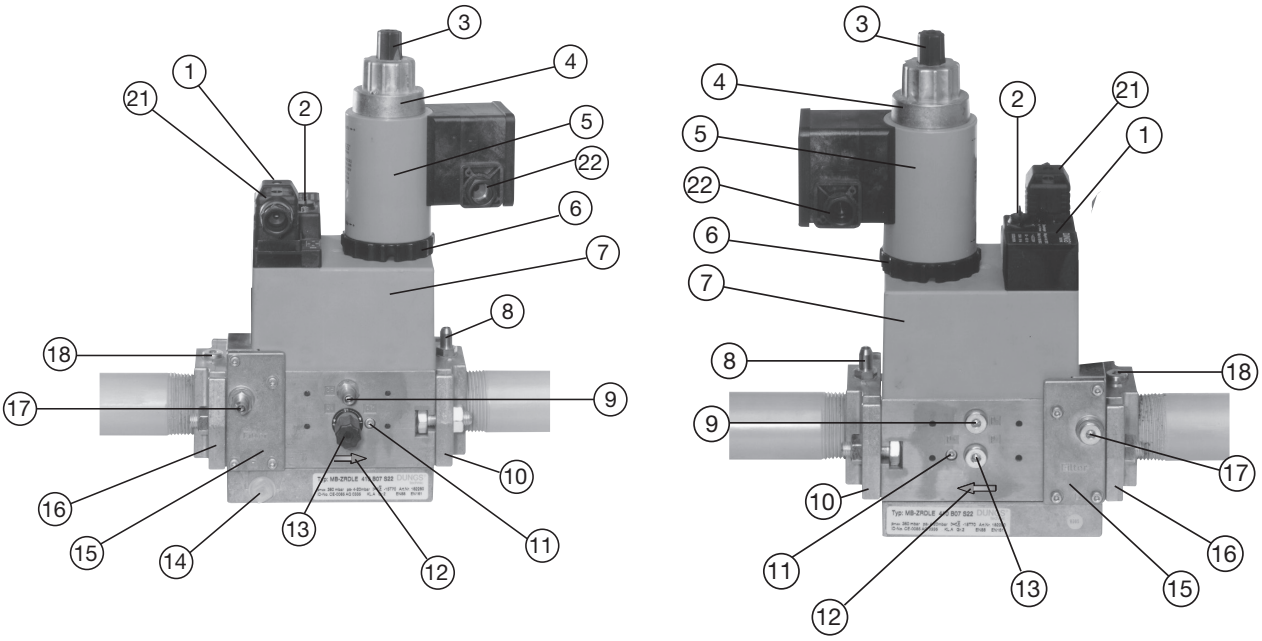

1. Operation display V1, V2 (optional)
2. Sealing cap, regulator
3. Setting cap
4. Hydraulic brake and setting plate stage 2 V2
5. Solenoid, 2nd stage V2
6. Adjustment ring stage 1
7. Solenoid, 1st stage
8. Test point connection G 1/8 possible
9. Test point connection G 1/8 downstream of valve 1, possible on both sides
10. Outlet flange
11. Test point connection M4 down stream of valve 2
12. Gas flow direction
13. Bypass throttle pilot flame adjustment
14. Vent nozzle, regulator
15. Filter (below cover)
16. Inlet flange
17. Test point connection G 1/8 upstream or filter, possible on both sides
18. Test point connection G 1/8 possible
19.
20.
21. Electrical connection for valves (DIN EN 175 301-803 connector).
22. Electrical connection for valves V2

8.1 Mounting closed position indicator (CPi)

1. Interrupt gas supply.
2. Remove G 1/8 seal plug and O ring from valve bottom.
3. Screw closed position indicator with new O ring (9,5 x 1.6).
4. Tighten using open-ended spanner WAF 12.
5. Electrical connection
   Remove cover A.
   Electrical connection to screw
   terminals 1,2,3.
6. Perform leakage and function test.
7. Set switching point
   Remove cover B if there is no
   contact from terminal 1 to terminal 3 when valve is closed.

   Rotate setting screw C to ” + ” until switching point is reached.
   Then rotate the setting screw by another scale division.
   Check function by activating the valve.
8. Re-set switching point Turn setting screw C back in arrow direction
   ”–” to the stop; proceed as described in 7.

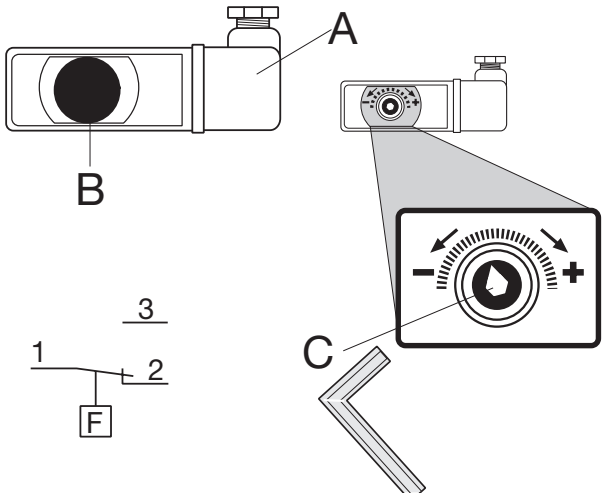

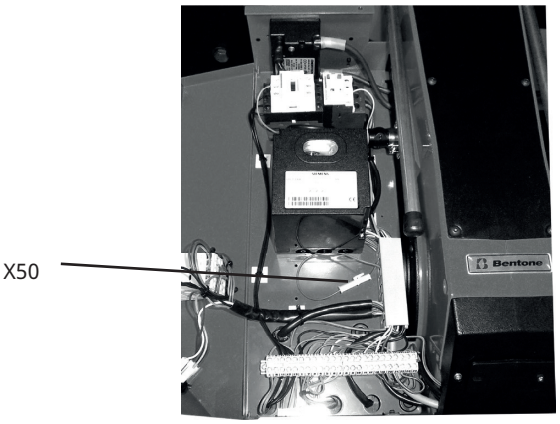

8.2 Flow adjustment 2-stage design

For pilot flame Set burner stage-2 in off position. Disconnect contact X50, Dismount cap X adjust pilot valve V3 for desired start values turn adjustment screw Z:

to the right = the gas flow is reduced

to the left = the gas flow is increased

Connect contact X50

For stage 1, loosen the lock screw a. Turn adjustment ring e:

to the right = the gas flow is reduced

to the left = the gas flow is increased

For stage 2, turn the hydraulic device b:

to the right = the gas flow is reduced
to the left = the gas flow is increased

Do not forget to tighten the lock screw again.

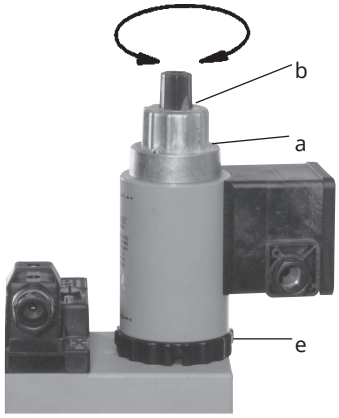

Flow adjustment

8.3 Adjustment of pressure governor

Adjust outlet pressure from governor by means of a screw driver. Min. and max. outlet pressures correspond to appr. 60 turns of the spring. It is not possible to change pressure springs in order to change the outlet pressure.

Turn to the right = the outlet pressure is increased

Turn to the left = the outlet pressure is reduced

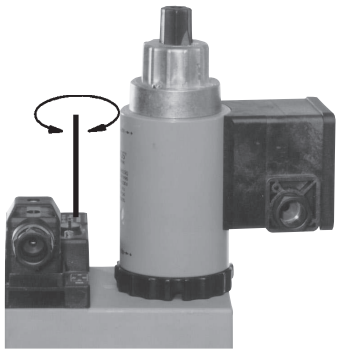

Adjustment of governor

8.4 Adjustment of of main valve damper

Remove the protective cover c.
Turn the adjustment knob d (use the protective cover as a tool) to the desired opening speed.

Turn to the right = opening speed is reduced

Turn to the left = opening speed is increased



Adjustment of main valve damper

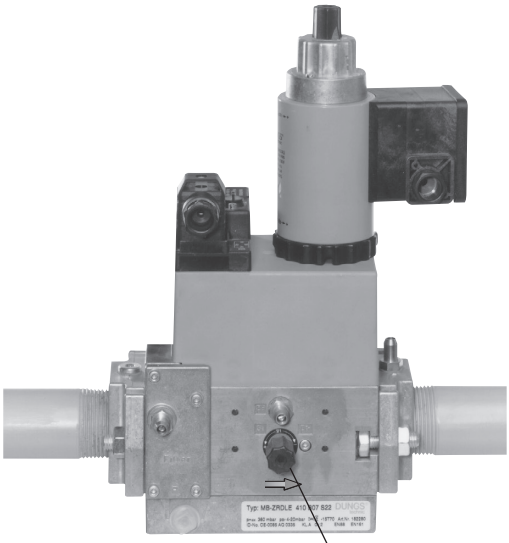

X
z: under cap

9. Service

Service and maintenance work may only be performed by qualified personnel. Perform operational check of all safety systems and components at each service. Only Enertech original parts should be used when replacing components.

! Use caution when operating the burner, surfaces may be hot.



9.1 Burner Service Schedule, Gas

Servicing must be carried out once a year or after 3,000 hours of operation.

Burner	1 year	3,000 h
Inspection of electrical installation	1 year	3,000 h
Leak check	1 year	3,000 h
Filter	1 year, replacement at Δp>10 mbar	3,000 h, replacement at Δp>10 mbar
Electrodes	Replacement/cleaning 1 year	Replacement/ceaning 3,000 h
Brake plate	Replacement/cleaning 1 year	Replacement/ceaning 3,000 h
Motor	1 year	3,000 h
Fan wheel	1 Year Replace if need for cleaning/imbalance	3,000 h Replace if need for cleaning/imbalance

9.2 Component replacement intervals

Components	**Service life – Recommended replacement**	**Service life – Recommended replacement Operating cycles**
Control system	10 years	250,000 starts
Valve control system	10 years	250,000 starts
Pressure switch	10 years	250,000 starts
Ignition system with flame guard	10 years	250,000 starts
UV flame sensor	10,000 h	N/A
Gas pressure controls	15 years	N/A
Gas valve without leak testing	10 years	250,000 starts
Gas valve with leak testing	Replacement upon fault detection	N/A
Gas pressure switch	10 years	250,000 starts
Safety blow-off system	10 years	N/A
Damper motor	N/A	500,000 starts
Contactor	10 years	500,000 starts



The burner and its components must be recycled according to applicable regulations.

13.3 Combustion device

1. Disconnect the main power and shut off the fuel supply.

Before obtaining access to electrical and fuel line components all supply circuits must be disconnected.

2. Remove cover (A), disconnect ignition and ionization cables and control arm (B) from nozzle assembly.
3. Loosen nut (C) and pull out the fan housing on the guides.
4. By loosening screw(s) (D), the combustion deviceis released and can be lifted out from the burner.
5. Check and clean the brake plate and gas inlet, replacing components as necessary.
6. Check that the ignition and ionisation electrodes are correctly set, (see Gas nozzle chapter) - replace if necessary.
7. Refit the combustion device in reverse order.
8. Press the burner together and lock with nut (C).
9. Switch on the main power and open the fuel supply.
10. Start burner and check/adjust combustion.

Check for leaks in the gas line.

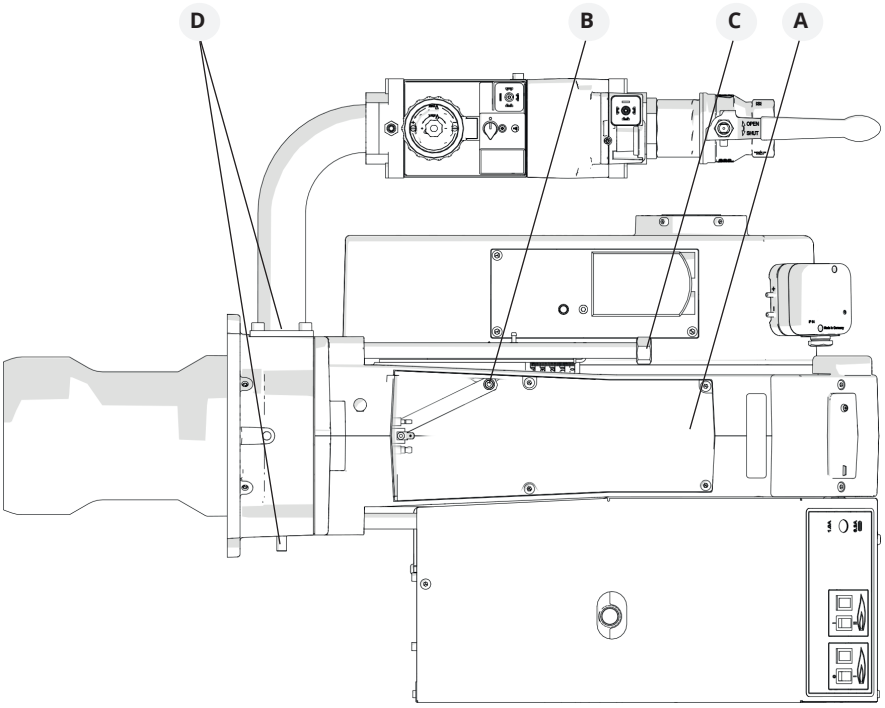

When servicing/replacing components that affect combustion, flue gas analysis and soot test must be carried out following installation.

8.4 Air damper

1. Disconnect the main power and shut off the fuel supply.

Before obtaining access to electrical and fuel line components all supply circuits must be disconnected.

2. Remove cover (A), disconnect ignition and ionization cables and control arm (B) from nozzle assembly.
3. Loosen nut (C) and pull out the fan housing on the guides.
4. Remove the intake grille (E) to the air intake.
5. Loosen screws (F) holding the damper motor fixing plate and lift the damper motor out.
6. Clean the air damper and air intake, lubricate the damper shaft if necessary.
7. Refit the damper motor and mounting plate, ensuring that the damper shaft and control arm are correctly connected.
8. Fit the intake grille.
9. Press the burner together and lock with nut (C).
10. Switch on the main power and open the fuel supply.
11. Start burner and check/adjust combustion.

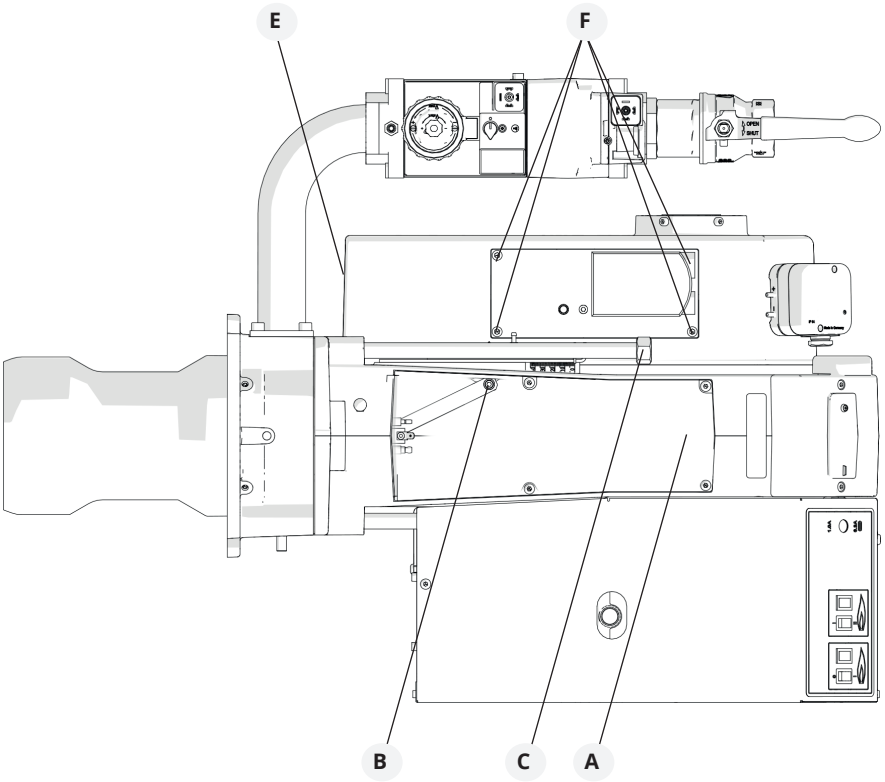

9.5 Replacement, Damper motor air

1. Disconnect the main power and shut off the fuel supply.

> **!** **Before obtaining access to electrical and fuel line components all supply circuits must be disconnected.**

2. Note the connection position of cables to the damper motor.
3. Disconnect cables from damper motor.
4. Loosen screws (G) to the damper motor fixing plate.
5. Disengage the damper motor and turn it to approx. 70°.
6. Lift up damper motor.
7. Remove the control arm (H) from the motor shaft.
8. Loosen screws (I) securing the damper motor to the fixing plate. Adjust the cams of the new damper motor according to the replaced motor, see chapter “Setting Damper motor” and fit the fixing plate.
9. Fit the control arm on the shaft of the damper motor. It is important that the screw is perpendicular to the flat surface of the shaft.
10. Refit the damper motor and mounting plate, ensuring that the damper shaft and control arm are correctly connected.
11. Connect the damper motor cable.
12. Switch on the main power and open the fuel supply.
13. Start burner and check/adjust combustion.



Releasing button

By pressing the button and snapping it down, the motor will be released and the damper can easily be turned. This function facilitates an exchange of damper motor.

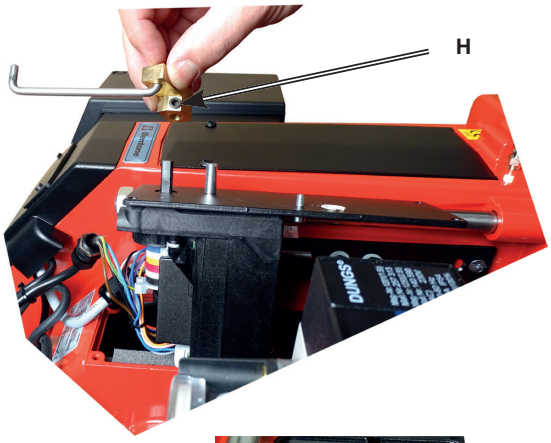

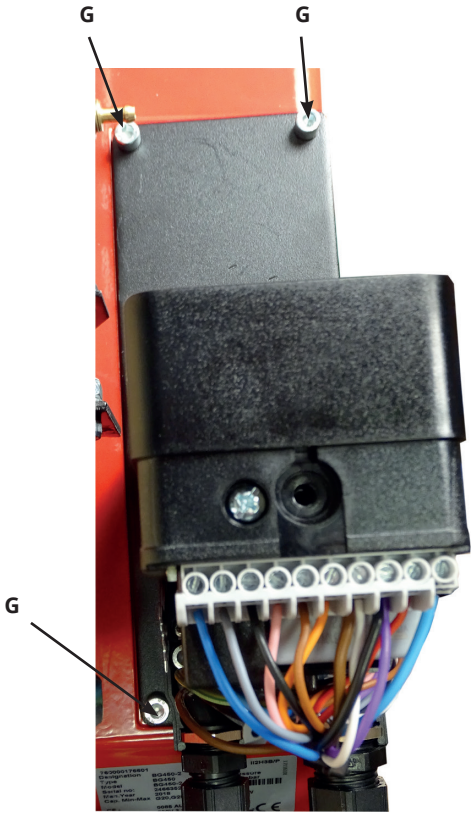

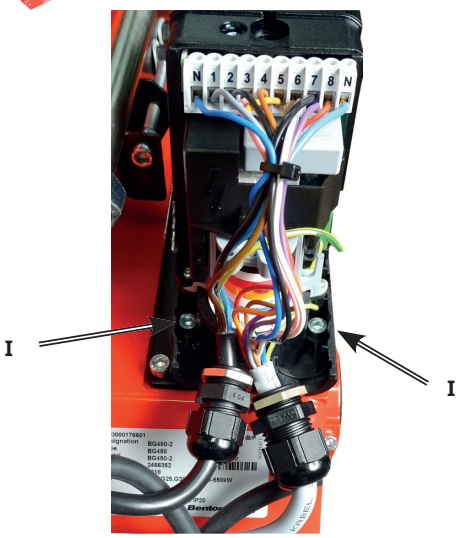

9.6 Fan

1. Disconnect the main power and shut off the fuel supply.

Before obtaining access to electrical and fuel line components all supply circuits must be disconnected.

2. Detach the electrical panel (Y).
3. Loosen the motor electrical connection and screws (X) enough to turn and lift out the motor.
4. Check the fan wheel attachment and any skew, replace if damaged.
5. Clean or replace the fan wheel.
6. Refit the parts.
7. Switch on the main power and open the fuel supply.
8. Start burner and check/adjust combustion.

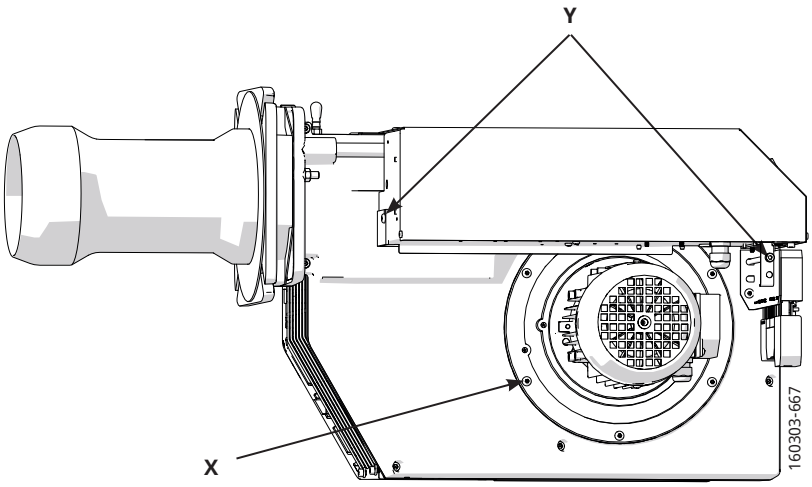

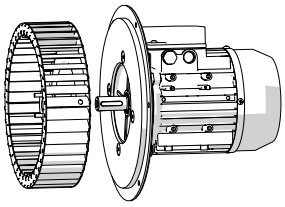

When servicing/replacing components that affect combustion, flue gas analysis and soot test must be carried out following installation.

9.7 Vibrations

Maximum permitted vibration level is 5.0 mm/s.

- Check tightness of fasteners.
- Check fan wheel for damage and contamination (replace if necessary).
- Check motor shaft and bearings. If they are worn, replace the motor.

Use screw to attach the vibration sensor.



9.8 Flame monitoring and ionisation current check (Continuous operation)

The standard version of the burner is monitored according to the ionisation principle. The ionisation current should be checked on initial start-up and at each service visit.
The cause of low ionisation current can be leakage current, poor connection to earth, fouling, or the angle of the ionisation electrode may need to be adjusted. Occasionally, an incorrect gas/air mix may result in poor ionisation current. Ionisation current is measured using a micro ammeter (µA) connected in series with the ionisation electrode and gas burner control. Connect the µ ammeter according to the diagram. The minimum required ionisation current is shown in the table. In practice, this current must be significantly higher, preferably more than 10 µA. Connection of the µA instrument is made easier by the fact that all gas burners are equipped with a divisible ionisation cable.

Technical data

For continuous operation!

Idle voltage at ION-terminals	AC 330 V
! Protect the ionisation electrode from electric shock!	
Short-circuit current	Max 0,5mA
Min. current for flame detection	Min 3 µA
Required current to ensure detection	Min 3 µA
Possible detection current	Max 10 µA

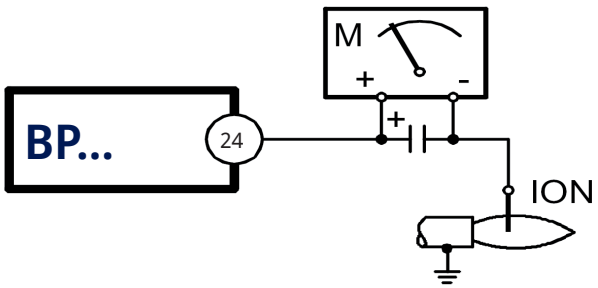

9.9 UV-5 (only intermittent operation)

This should not be exposed to temperatures higher than 60°C. The signal running through the UV probe when it is illuminated cannot be measured.
To check the flame, perform the following:
The LEDs can show the flame strength in Control mode by pressing the reset button for 3 seconds when the Flame LED flashes during start-up. In Control mode, the Status LED shines yellow, the Fan LED flashes, and LEDs 2-6 show the flame signal strength. Each LED corresponds to 20% of the total flame signal. 5 lit LEDs correspond to 100% and 2 LEDs correspond to 40%.

9.10 Replacement of electrical components

1. Disconnect the main power and switch off the fuel supply.

Before obtaining access to terminals, all supply circuits must be disconnected.

2. Note the connection of the existing component and disassemble.
3. Fit new component with same connection or with specified alternative connection.
4. Switch on the main power and check the operation of the new component.
5. Start burner and check/adjust combustion.

When servicing/replacing components that affect combustion, flue gas analysis and soot test must be carried out following installation.

165 105 11-3

10. Handing over of the installation

- Make repeated start attempts to ensure that the adjustments function.
- Close the ball valve during operation to check that the gas switch switches off at the set value.
- Remove the hose for the air pressure switch to check that the burner locks out.
- Check that all protective covers and measurement nipples are mounted and fastened.
- Fill out necessary test reports.
- Instruct the persons in charge of the operation on the service and maintenance of the installation and what to do should any troubles occur.
- Inspection and service must be carried out by authorized personnel.

Review and service should be performed by authorised personnel only.

172 615 04-2

11. Troubleshooting

Conditions favourable to trouble-free operation of the system can only be guaranteed through the interaction between three factors: electricity, gas flow and combustion air. If any of these factors change, it may cause a malfunction.

Before requesting servicing, check the following points:

1. Are the system's gas taps open?
2. Are the fuses intact and is the power on?
3. Are control devices (room thermostat, boiler thermostat, etc.) correctly set?
4. Is there sufficient gas pressure to the burner?
5. Are the burner controls on standby and not locked?
6. Is there sufficient air supply to the burner?

Cause of fault	Action
Burner does not start:	
No gas.	Make sure all gas taps are open.
No power.	Check the fuse, thermostat and electrical connections.
Burner motor does not start.	Motor protection has tripped. Motor faulty.
Burner control faulty.	Replace.

Burner motor running, no ignition spark at the end of pre-aeration:	
No power in the terminals.	Check the connector. Replace faulty burner controls.
Ignition electrodes in contact with each other or earth.	Adjust.
Ignition electrode porcelain damaged.	Replace the electrodes.
Poor connection to cable connectors.	Adjust connection.
Ignition cables damaged.	Replace.
Transformer damaged, no power to secondary winding.	Replace the transformer.
Ignition cable and ionisation cable swapped around.	Reconnect.

No flame propagation:	
Gas solenoid valve faulty.	Replace.
Gas solenoid valve does not open despite having power.	Replace solenoid valve terminals, or entire valve.
No power to solenoid valve.	Check the connection.
No electrical connection through air pressure gauge.	Check the air pressure gauge's settings and functions.
Ignition load incorrectly set.	Increase/decrease gas supply Reduce airflow.
Burner control faulty	Replace
Air pressure gauge incorrectly set or faulty	Check the settings and reset, or replace
No acknowledgement signal due to incorrect adjustment or misalignment of the control motor cams.	Check the settings and realign.

Burner trips after safety time limit despite flame propagation:	
No ionisation current or UV cell incorrectly positioned.	Adjust ionisation electrode and UV cell Check cables and connectors.
Burner control monitor faulty.	Replace burner control.
Voltage lower than 185V.	Contact an electrician.
Ignition electrodes disrupting ionisation current.	Adjust ignition electrodes. Re-polarise the transformer.
Poor earth connection.	Ensure adequate earth connection.
Phase and neutral swapped around.	Check wiring diagram and change accordingly.

Cause of fault	Action
Burner trips during pre-aeration:	
Air sensor faulty or incorrectly set.	Increase/decrease air setting. Reduce air volume.
Ignition load incorrectly set.	Increase/decrease gas supply Reduce airflow.
Gas pressure too low.	Increase pressure. If necessary, contact gas supplier.

Pulsations at start-up:	
Ignition electrodes incorrectly set.	Adjust .
Gas pressure too high.	Check and adjust using pressure gauge and pressure control valve.
Flue gas side blocked.	Check the chimney flue.

Burner pulsates during operation:	
Burner incorrectly set.	Adjust.
Burner dirty.	Clean the burner.
Incorrect chimney.	Check and modify dimensions if necessary.

Burner functioning properly but with occasional blockage:	
Ionisation current too low.	Check. Must be at least 6µA, but should ideally lie between 8-20µA.
UV cell incorrectly positioned.	Adjust.
Voltage drop at certain times.	Must not drop below 15% of rated voltage. Contact an electrician if necessary.
Incorrectly set or faulty air sensor.	Check the settings and reset, or replace.
Ignition electrode overload.	Replace.
Burner control ambient temperature too high.	Insulate for heat, Max. 60 °C.
Ignition spark too weak.	Check the transformer.

Poor combustion:	
Poor draught conditions.	Check the chimney.
Flue gas temperature too high.	Boiler overloaded Decrease the gas volume, sweep the chimney if necessary.
CO2 content too low.	Choke the air supply. Check the boiler for any leakages. Choke the draught if too high.

CO content too high:	
Surplus air when using natural gas and liquefied petroleum (propane, butane).	Choke the air supply.
Poor air supply.	Open the air supply. Check flue gas damper.
Holes in gas nozzle clogged.	Clean.
Poor fresh air intake.	Check and increase.
Flame at incorrect angle due to combustion head out of position.	Check the combustion head and readjust.

Condensation build up in boiler and chimney:	
Flue gas temperature too low or gas volume too low.	Raise the flue gas temperature by increasing gas volume Insulate the chimney.

12. Service- and inspection protocol

Installation	**Boiler**	
Name:	**Type:**	**Efficiency kW:**
Address:	**Burner**	
	Type:	**Efficiency kW:**
Installed by:	**Date:**	

Date										
	Nm³ gas/h	Governor		CO_2	CO	Fluegas temp	Ionisation current	Pressure		Efficiency
								Fire room	Chimney	
Measure-ment		Before	After	%	%	°C	µ A	mbar	mbar	%
	Small Flame									
	Large Flame									
	Measures									

Date										
	Nm³ gas/h	Governor		CO_2	CO	Fluegas temp	Ionisation current	Pressure		Efficiency
								Fire room	Chimney	
Measure-ment		Before	After	%	%	°C	µ A	mbar	mbar	%
	Small Flame									
	Large Flame									
	Measures									

Date										
	Nm³ gas/h	Governor		CO_2	CO	Fluegas temp	Ionisation current	Pressure		Efficiency
								Fire room	Chimney	
Measure-ment		Before	After	%	%	°C	µ A	mbar	mbar	%
	Small Flame									
	Large Flame									
	Measures									

EU Declaration of conformity

Bentone Gas Burners

Type:	Certificate No.	Type:	Certificate No.
BFG 1	**CE-0123CT1269**	**BG 550**	**CE-0123CT1326**
STG 120	**CE-0123CT1270**	**BG 650**	**CE-0123CT1348**
STG 146	**CE-0123CT1281**	**BG 700**	**CE-0123CT1359**
BG 300	**CE-0123CT1292**	**BG 800**	**CE-0123CT1360**
BG 400	**CE-0123CT1304**	**BG 950**	**CE-0123CT1371**
BG 450	**CE-0123CT1315**		

This declaration of conformity is issued under the sole responsibility of the manufacturer.
The object of the declaration described above is in conformity with:

- **Gas Appliance Regulation 2016/426/EU**
- **Machinery Directive 2006/42/EC**
- **EMC 2014/30/EU**
- **The Restriction of the Use of Certain Hazardous Substances (RoHS) Directive 2011/65/EU**

References to the relevant harmonised standards used or references to the other technical specifications in relation to which conformity is declared:

EN 676:2020	Excluding the requirements of Annex J/K. Automatic forced draught burners for gaseous fuels.

Additional information can be downloaded at: www.bentone.com

Manufacturer: Enertech AB
Näsvägen 8
SE-341 34 LJUNGBY
Sweden

Notified Body: TUV SÜD Product Service GmbH
Ridlerstaße 65
D-80339 München, Germany

Notified Body Number: 0123

Ljungby, 2022-10-10

Joachim Hultqvist

Technical Manager
Enertech AB

Ola Karlsson

Quality Manager
Enertech AB

Bentone®

UK Declaration of conformity

Bentone Gas Burners

Type:

BFG 1	**BG 300**	**BG 550**	**BG 800**
STG 120	**BG 400**	**BG 650**	**BG 950**
STG 146	**BG 450**	**BG 700**	

This declaration of conformity is issued under the sole responsibility of the manufacturer.
The object of the declaration described above is in conformity with:

- **Gas Appliances (Enforcement) and Miscellaneous Amendment Regulations 2018**
- **Supply of Machinery (Safety) Regulations 2008**
- **Electromagnetic Compatibility Regulations 2016**
- **The Restriction of the Use of Certain Hazardous Substances in Electrical and Electronic Equipment Regulations 2012**

References to the relevant harmonised standards used or references to the other technical specifications in relation to which conformity is declared:

BS EN 676:2020	Excluding the requirements of Annex J/K. Automatic forced draught burners for gaseous fuels.

Additional information can be downloaded at: www.bentone.com

Manufacturer: Enertech AB
Näsvägen 8
SE-341 34 LJUNGBY
Sweden

Approved Body: TUV SÜD BABT Unlimited
Octagon House,
Concorde Way, Segensworth North,
Fareham, Hampshire,
PO 15 5RL, United Kingdom

Approved Body Number: 0168

Ljungby, 2022-10-10

Joachim Hultqvist

Technical Manager
Enertech AB

Ola Karlsson

Quality Manager
Enertech AB

Enertech AB. P.O Box 309, SE-341 26 Ljungby
www.bentone.com

Bentone®