CR00301 178 040 72-5 2021-06-08

Installation- and maintenance instruction

Biogas BG 300-2

LME22.232C2E

DMV-DLE 512/11

MVD 210/5

Translation of the original instructions.

Bentone®

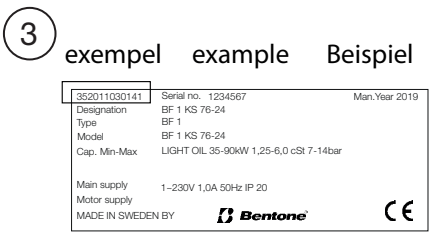

-sv

1. Manualer på övriga språk

2. www.bentone.com\
nedladdning
eller scanna QR-koden.

3. Skriv in brännarens artikelnummer som finns på din typskylt (se bild) och välj ditt språk.

Detaljerad ecodesign information kan laddas ner på:
www.bentone.com/ecodesign.

-en

1. Manuals in other languages

2. www.bentone.com\download or scan QR-code.

3. Enter the burner`s article number on your data plate (see picture) and select language.

Detailed ecodesign information can be downloaded at:
www.bentone.com/ecodesign.

-da

1. Manualer på andre sprog

2. www.bentone.com\download eller scan QR-koden.

3. Indtast brænderens artikelnummer, der findes på typeskiltet (se billede), og vælg dit sprog.

Detaljerede oplysninger om ecodesign kan downloades på:
www.bentone.com/ecodesign.

-fr

1. Manuels dans d'autres langues

2. www.bentone.com\download ou scannez le code QR.

3. Saisir le numéro d'article du brûleur sur votre plaque signalétique (consultez l'illustration) et sélectionnez la langue.

Des informations détaillées sur l'écodesign peuvent être téléchargées à l'adresse:
www.bentone.com/ecodesign.

-de

1. Gebrauchsanweisungen in anderen Sprachen

2. www.bentone.com\download oder scannen Sie den QR-Code.

3. Geben Sie die Artikelnummer des Brenners auf Ihrem Typenschild ein, (siehe Bild) und wählen Sie die Sprache aus.

Detaillierte Informationen zum Ecodesign können unter www.bentone.com/ecodesign heruntergeladen werden.

Table of contents

1. General Information 4

2. Technical data 7
- 2.1 Dimensions BG 300-2, BG 300 M 7
- 2.2 Capacity range 8
- 2.3 Gas categories, approved gases 8
- 2.4 Working field 9
- 2.5 Electric Specification EN 60335-2-102 9
- 2.6 Description 10

3. General instructions 11
- 3.1 General instructions 11
- 3.2 Installation and maintenance instructions 11
- 3.3 Instructions 11
- 3.4 Inspection and maintenance 11
- 3.5 Start up 11
- 3.6 Commissioning of installation 11

4. Installation 12
- 4.1 Delivery check 12
- 4.2 Preparations for installation 12
- 4.3 Gas supply 12
- 4.4 Electric connection 12
- 4.5 Setting brake plate and air flow 12
- 4.6 Mounting on the boiler 13
- 4.7 Inspection of gas nozzle before commissioning 14
- 4.8 Gas nozzle 15
- 4.9 Setting Damper motor 2-stage 16

5. Setting the burner 17
- 5.1 Adjustment of brake plate 17
- 5.2 Control of burner head 17
- 5.3 Setting the air pressure switch 19
- 5.4 Setting the min. gas pressure switch 20
- 5.5 Skeleton diagram, biogas 2-stage burner 21
- 5.6 Adjusting the Gas Train 21

6. Gas pressure regulator Type FRS 22
- 6.1 Double Solenoid valve Type DMV-D.../11 Type DMV-DLE.../11 24
- 6.2 Adjustment of gas solenoid valve dungs MVD 26
- 6.3 Recommended excess air when using default setting 27
- 6.4 Determining the gas quantity for the system 27
- 6.5 Calculating the quantity of gas supplied 29

7. Service 30
- 7.1 Servicing the combustion assembly 30
- 7.2 Replacement of damper motor, air 31
- 7.3 Flame monitoring and ionisation current check 32

8. Handing over of the installation 34

9. Fault location, functional troubles 34

10. Electric equipment 35
- 10.1 Safety system 35
- 10.2 Wiring diagram LME 36
- 10.3 Function LME... 37
- 10.4 Control program at faults; fault mode indicator LME 38
- 10.5 Leakage control Dungs VPS 504 40

11. Troubleshooting 42

12. General instructions for gasburners 45

1. General Information

This Installation and Maintenance manual:

- is to be regarded as part of the burner and must always be kept near the installation site.
- is intended for use by authorised personnel.
- must be read prior to installation.
- must be observed by all who work with the burner and associated system components.
- work with the burner may only be carried out by certified installers/ personnel.

Enertech AB is not liable for any typographical errors and reserves the right to make design changes without prior notice.

Safety instructions

- The burner may only be used for its intended purpose in accordance with the product's technical data.
- The burner may only be installed and operated by authorised personnel.
- The product is packaged to prevent damage from occurring during handling. Handle the product with care. Lifting equipment must be used to lift larger packages.
- The products must be transported/stored on a level surface in a dry environment, max. 80% relative humidity, no condensation. Temperature -20 to +60 °C.
- Check that the burner is compatible with the boiler's output range.
- All components must be installed without being bent, twisted or subjected to mechanical or thermal forces which can affect the components.
- The burner must be installed so that it complies with local regulations for fire safety, electrical safety, and fuel distribution.
- The gas outlet from the pressure regulator shall be configured in accordance with applicable regulations and lead to a safe area.
- Make sure when installing the equipment that there is enough space to service the burner.
- Permitted temperature during operation -10 to +60 °C. Max 80% relative humidity, no condensation.
- The installer must ensure that the room has adequate air supply.
- The room must comply with local regulations pertaining to its intended use.
- The installation site must be free of chemicals.
- Burner pipes, fan wheels and air dampers may contain sharp edges.
- The surface temperature of the burner's components can exceed 60 °C.
- Caution: The burner has moving parts, and there is risk of crushing injuries.

- The electrical installation must be professionally carried out in accordance with applicable high voltage regulations, as per Enertech's recommendations.
- Before servicing, shut off the fuel supply and turn off the power to the burner.
- Seal inspections must be performed during installation and servicing to prevent gas leakage.
- Care should be taken by the installer to ensure that no electrical cables or fuel lines are crushed or otherwise damaged during installation or servicing.
- If the boiler is equipped with an access hatch, this must be equipped with a hatch opening switch connected to the burner's safety system.
- When in operation, the burner's noise level can exceed 85 dBA. Use hearing protection.
- The burner must not be put into operation without proper safety and protection devices.
- A Class BE fire extinguisher is recommended.
- It is forbidden to alter thedesign or use accessories which have not been approved by Enertech in writing.
- Prior to operation, the following points must be checked:
- fitting and installation work has been completed and approved
- electrical installation has been correctly performed
- flue gas ducts and combustion air ducts are not blocked
- all actuators and control and safety devices are in working order and correctly set

Actions to take if you smell gas

Turn off the equipment and the boiler. Open windows and doors. Prevent open flames or sparking, e.g. do not turn lights on or off, do not use any electrical appliances, do not use mobile phones. Open windows and doors. Close the gas ball valve. Warn residents; do not use doorbells. Evacuate the building. Notify the installer or gas supplier once the building has been evacuated.

Burner servicing schedule

Servicing must be carried out once a year or after 3 000 hours of operation.

Burner	1 year	3 000 hrs
Inspection of electrical installation	1 year	3 000 hrs
Leakage check	1 year	3 000 hrs
Filter	1 year replacement at Δp>10 mbar	3 000 hrs replacement at Δp>10 mbar
Electrodes	Replacement/Cleaning 1 year	Replacement/Cleaning 3 000 hrs
Brake disc	Replacement/Cleaning 1 year	Replacement/Cleaning 3 000 hrs
Motor	1 year	3 000 hrs
Fan wheel	1 Year Replacement when cleaning needed/imbalance	3 000 hrs Replacement when cleaning needed/imbalance

Component replacement intervals

Control system	10 years	250 000 starts
Valve control system	10 years	250 000 starts
Pressure switch	10 years	250 000 starts
Ignition system with flame guard	10 years	250 000 starts
UV flame sensor	10 000 hrs	N/A
Gas pressure regulators	15 years	N/A
Gas valve without seal testing	10 years	250 000 starts
Gas valve with seal testing	Replacement upon fault detection	N/A
Gas pressure switch	10 years	250 000 starts
Safety blow-off system	10 years	N/A
Damper motor	N/A	500 000 starts
Contactor	10 years	500 000 starts

The burner and its components must be recycled according to applicable regulations.

Delivery check

- Make sure everything is delivered and the goods have not been damaged during transit.
- If something is wrong with a delivery, report it to the supplier.
- Transport damage must be reported to the shipping company.

2. Technical data

Burners are intended for use at:

- Hot water boilers in intermittent operation.

2.1 Dimensions BG 300-2, BG 300 M

- Gas connection ¾-2".

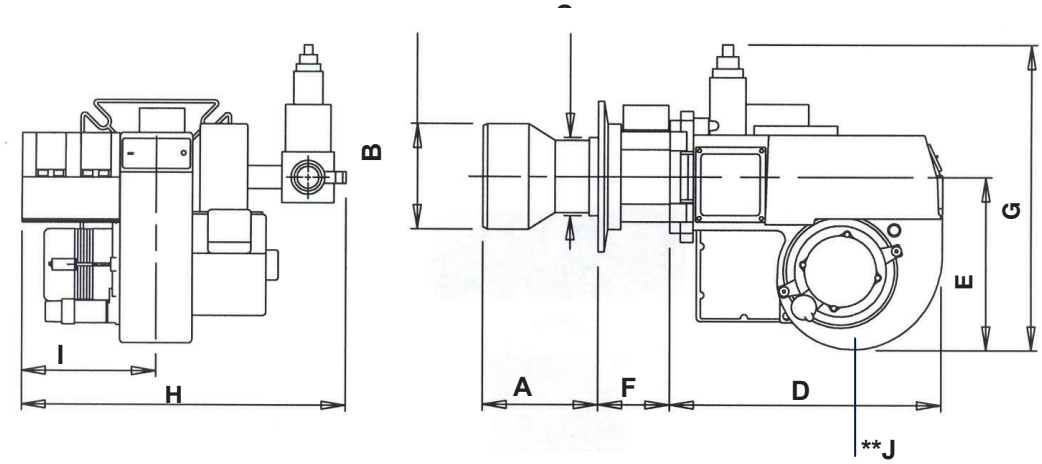

Type		Length of burner tube	Flange measure A	Burner tube measure B	Burner tube measure C
BG 300	Standard 1	145	125	ø120	ø110
	Standard 2	245	225	ø120	ø110

	D	E	F	G	H	I	J
BG 300	372	220	100	*380	*460	170	**200

2.1.1 Heat generator connection dimensions

	K	L	M
BG 300	M10	Ø 175-240	ø125 (***115)

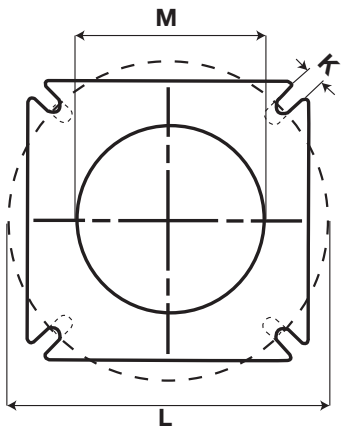

* The above dimensions are max. measurements. Depending on the components used, the measurements may vary.

** Min. recommended distance to floor.

***Dimensions when installing blast tubes from the inside of the boiler

2.2 Capacity range

Capacity kW	Gas quantity at min. power Nm³/h ¹)	Gas quantity at max. power Nm³/h ¹)	Max. connection pressure mbar	Min connection pressure mbar
BG 300				
G20 50-200	5.2	21	360	See data plate
G25 50-170	6,1	20,7	360	
G30 65-200	2,0	6,1	360	
G31 50-200	2,0	8,1	360	

¹) Lower heat value Hu at normal state 15°C and 1013.25 mbar EN676				
Grade of gas		kWh/Nm³	MJ/Nm³	kcal/Nm³
Natural gas	G20	9.5	34.02	8126
Natural gas	G25	8.2	29.25	6986
Butane	G30	32.5	116.09	27728
Propane	G31	24.6	88.00	21019

Gas quantity and capacity vary according to grade of gas and connection

2.3 Gas categories, approved gases

Only dry gas is permitted for use.

Category	Country of destination	Supply pressure
II_{2R3R}	AT, BE, BG, CH, CY, CZ, DE, DK, EE, ES, FI, FR, GB, GR, HR, HU, IE IS, IT, LT, LU, LV, MK, MT, NL, NO, PL, PT, RO, RS, SE, SI, SK, TR	20 mbar
$II_{2H3B/P}$	AT, CH, CY, DK, FI, LT, RO, SE, SK	20 mbar
II_{2H3P}	GB, IE	20 mbar
$II_{2L3B/P}$	NL, RO	20 mbar
$II_{2E3B/P}$	PL	20 mbar
$I_{2E(R)B}$	BE	20 mbar
I_{3P}	BE	20 mbar

160302-180-2

2.4 Working field

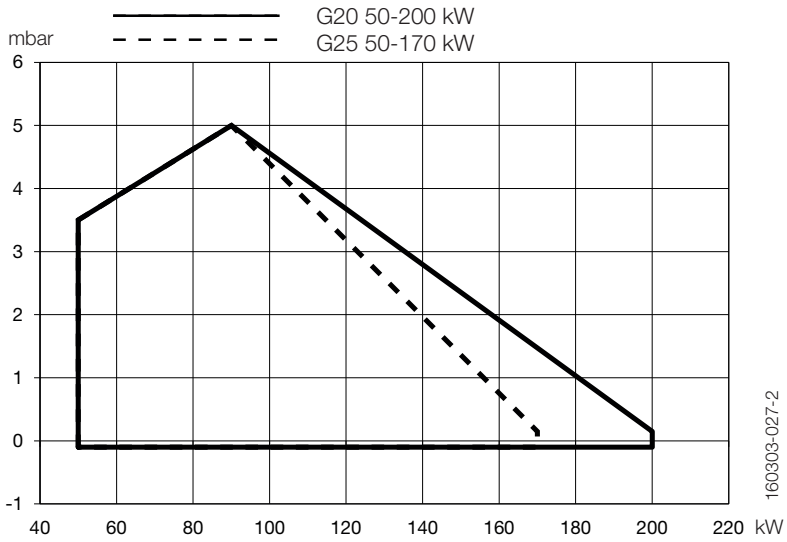

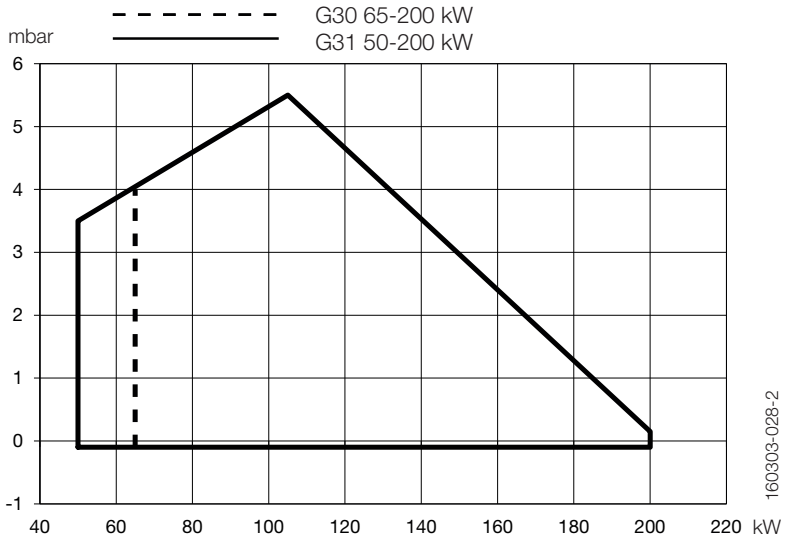

! Do not exceed working field.

2.5 Electric Specification EN 60335-2-102

Burner correspond to IP20

Type	BG 300
Motor	180W, 230V, 1.3A, 50Hz
The recommended main fuse motor	C10A
Control power	230V, 2.1A, 50Hz
Sound	82 dBA ± 0.5 dBA

Measurements according to EN 3746: 2010

Alt.1 The sound level of the burner can be reduced by equipping the burner with silencer. Installation must be done so it does not prevent air supply to the burner.

Alt.2 The burner's noise level can be reduced by connecting the burner's air intake to the air duct that opens into an appropriate location. Installation must be done so it does not prevent air supply to the burner.

2.6 Description

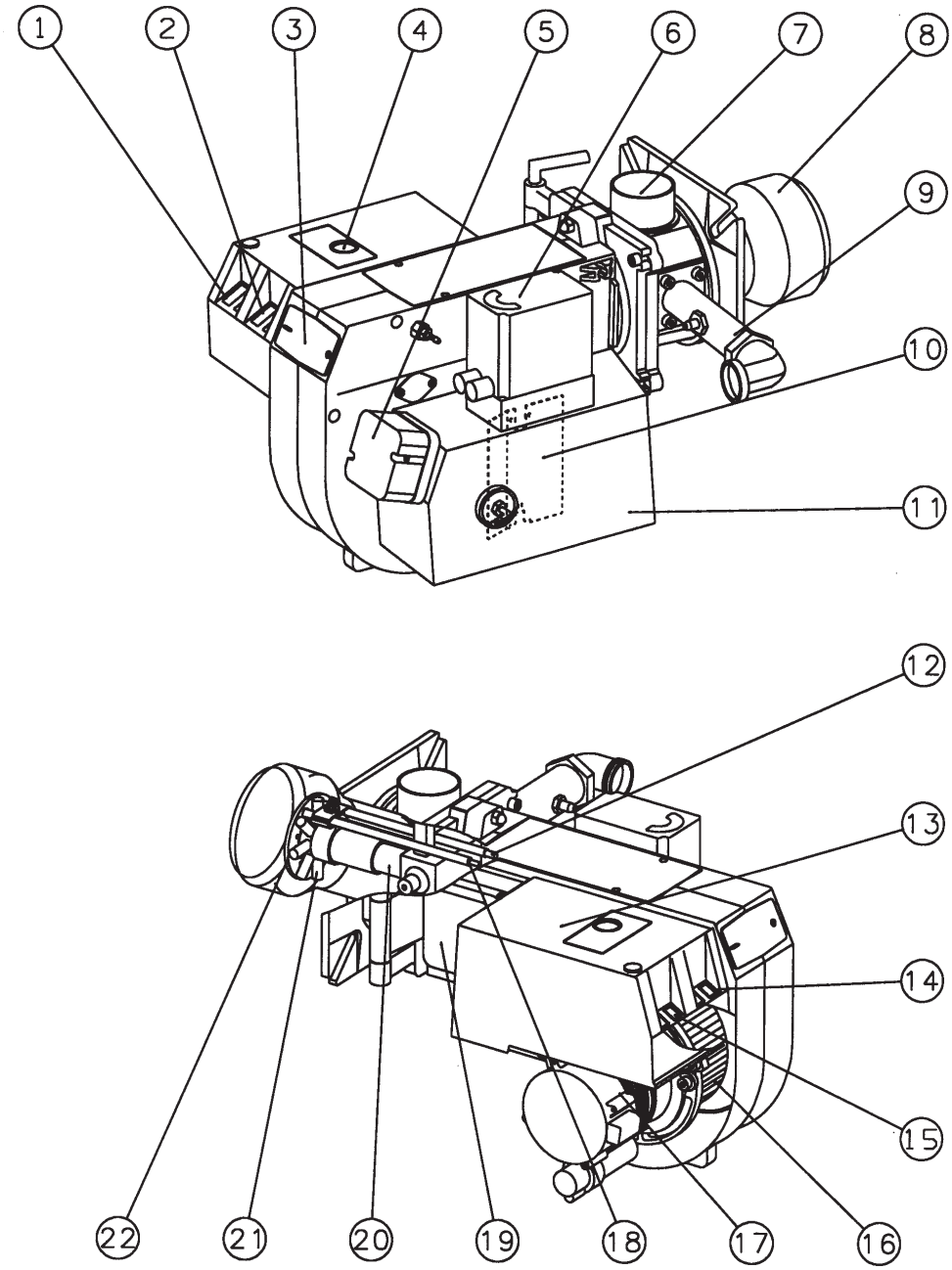

Components

1. Switch 0-1
2. Switch I-II
3. Cover, inspection glass
4. Reset button
5. Air pressure switch
6. Damper motor
7. Inner assembly adjustment (not town gas)
8. Flame cone
9. Connection gas fittings
10. Air damper
11. Air intake
12. Ignition electrode
13. Electric panel
14. Indicating lamp Stage 2
15. Indicating lamp Stage 1
16. Fan wheel
17. Motor
18. Ionization electrode
19. Transformer
20. Inner assembly
21. Nozzle
22. Brake plate

3. General instructions

3.1 General instructions

The installation of the gas burner must be carried out in accordance with current regulations and standards. The installers of gas burners should therefore be acquainted with all regulations and ensure that the installation complies with the requirements. The installation, mounting and adjustment should be made with the greatest care and only the correct gas should be used.

3.2 Installation and maintenance instructions

The maintenance instructions supplied with the burner must be kept at an easily accessible location in the boiler room.

3.3 Instructions

The user should be thoroughly in-structed in the function of the gas burner and the whole installation. The supplier must instruct the user.

3.4 Inspection and maintenance

The unit must be serviced and maintained at the interval specified in the service schedule. If the burner is in a dirty environment, service should be done at more frequent intervals than specified.

3.5 Start up

After the burner has been fitted to the boiler and the electric connection, the leakage control, the venting and the electric function test have been carried out, the burner will be ready for start-up.

Howerer, study the sections dealing with adjustments of multi-bloc, combustion air and combustion head. Open the ball valve and switch on the main switch. If the burner starts the actual adjustment can be made.

3.6 Commissioning of installation

Control of the combustion. The combustion quality is checked by means of a flue gas analysis device. Adjust the burner to appr. 20% excess air in accordance with the table. Check the flue gas temperature. Calculate the efficiency. Check also the actual gas volume on the gas meter so that the correct input is achieved.

4. Installation

4.1 Delivery check

Check that all has been delivered and that the goods have not been damaged during transport. If that is not the case, please notify the delivery company. Transport damages should be reported to the forwarding agency.

4.2 Preparations for installation

Check that the measurements and capacity range of the burner are compatible with the boiler. The power ratings on the type plate refer to the min. and max. power of the burner.

4.3 Gas supply

For good operating safety, it is important that the gas supply system is installed correctly.
Consider the following:

1. Check that the burner is approved for the gas quality of the installation. If not, please contact the supplier.
2. Check that the gas components of the burner are approved for indicated gas pressure.
3. The gas supply system should be installed in accordance with current standards.
4. Pipe lines should be run so that service on boiler and burner is facilitated.
5. Pipe lines should be run so that eventual contaminants cannot come into contact with the gas components.
6. Gas discharge system must be installed prior to local regulations.

4.4 Electric connection

Before starting the electric installation, the main switch must be turned off. If the boiler has a 7-pole and a 4-pole Eurostecker connector, these usually fit directly to the burner. If not, use the connectors included, (see connection under Electric equipment).

4.5 Setting brake plate and air flow

Before the placing into service, the burner should be initially set according to diagram, (see Basic settings). Note that it is only a basic setting which should be adjusted once the burner has been started.

If an electric connection other than the one recommended by Enertech is used, a risk of damage and injury can arise.

172 515 03-2

4.6 Mounting on the boiler

Remove the combustion unit from the burner. Fit the enclosed flange and gasket to the boiler. If new fixing holes must be drilled, use the fixing flange as a pattern.

Removal of valve unit from burner

Remove the plug-in contact from the multi-bloc. Loosen the union nut.

Removal of fan house unit from burner.

Remove the screws (A). Swing out the fan housing. Remove the ionisation and ignition wires from the electrodes. Remove the bolt (B) on the spectacle flange. Lift away the fan housing.

Installation example

Connect the gas to the burner by means of the ball valve. Ensure that the union nut, ball valve and tubing make it easy to remove the burner for inspection and service.

! Check the gas tightness.

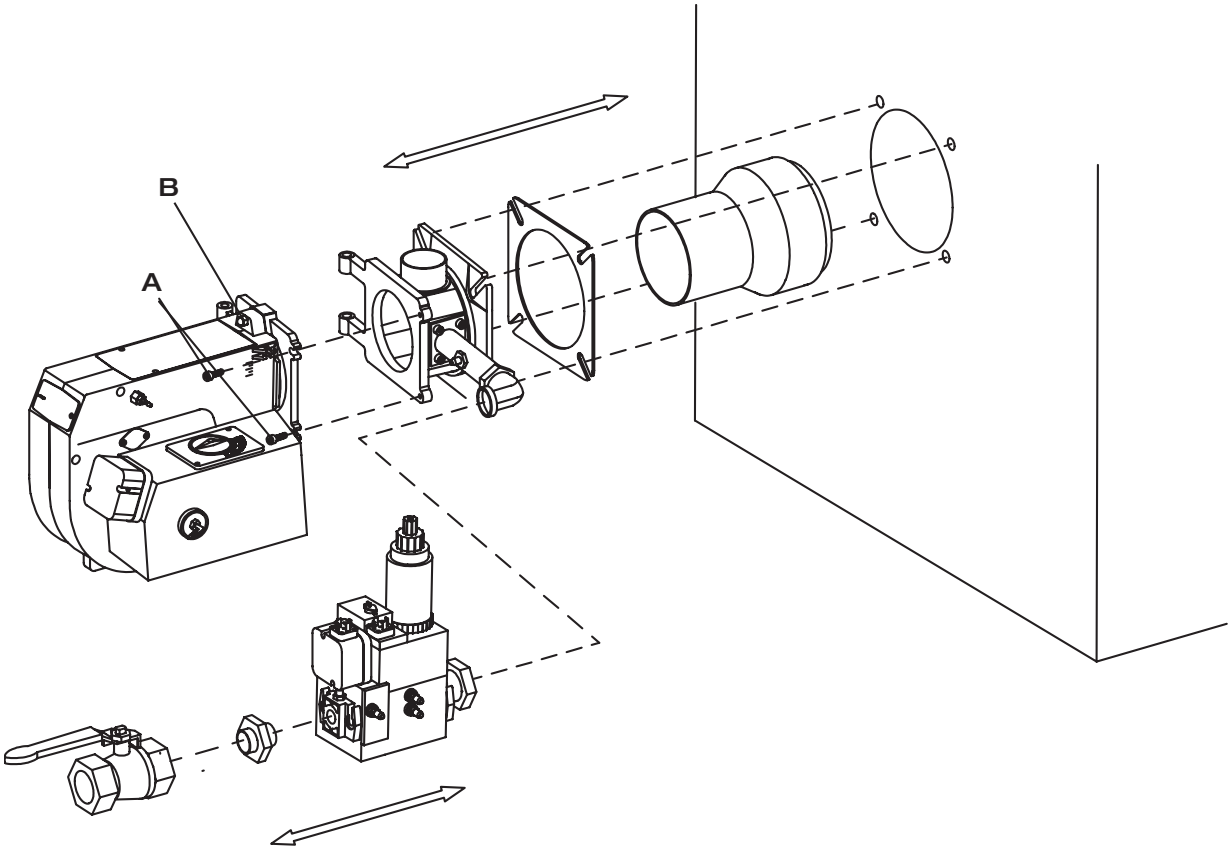

4.7 Inspection of gas nozzle before commissioning

General rules

Care should be taken by the installer to ensure that no electrical cables or fuel/gas pipes are trapped or damaged during installation or service/ maintenance.

> ! If the burner is directly connected, ensure that all components on the burner are without power.

Gas nozzle

Check that the ignition and ionisation electrodes are correctly set. In the figure (see the gas nozzle chapter), the dimensions are specified for adjustment of the ignition and ionisation electrodes.

Gas quality

Ensure that the burner head is meant for the gas quality to be used (see capter gas nozzle).

De-aerating

De-aerating of the gas line is conducted, for example, by unscrewing the screw on the measuring nipple for the connection pressure. Connect a plastic hose and release the gas in a safe place. Once de-aerating is completed, be sure to refit the screw on the measuring nipple.

Leakage control

When making a leakage control of the gas supply system the solenoid valve should be closed. Connect a pressure gauge to the test nipple Pa, see fig. The test pressure in the system should be 1,5x max. inlet pressure or min. 150 mbar. If any leakage, locate the source by means of soapy water or a leak location spray. After tightening repeat the test.

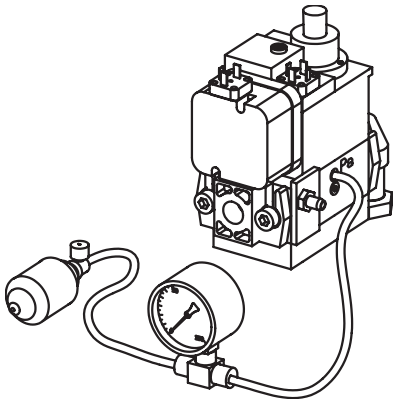

Electric function test:

Ensure that phase and neutral are not reversed. The gas shut-off cock should be closed.To prevent the gas pressure switch from locking out it should be linked temporarily.

After the main switch has been switched on and the thermostats have been adjusted the pre-purging period begins (30-35sec.). At the end of this period the pre-ignition period starts (0,5-2,5 sec. dependent on the design of the gas control). The gas valve is energized and opens and flame is established. At the end of the safety time (2-3 sec.) the gas control locks out. The solenoid valve and the motor will be "dead". Remove the link from the gas pressure switch after the test is finished.

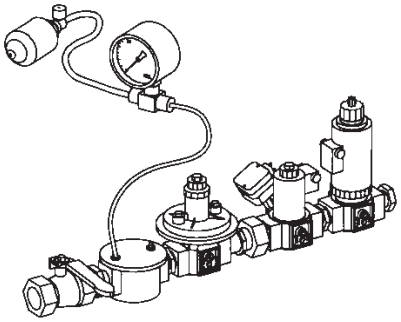

Note on 2-stage and modulating burners that during the pre-purging period the damper opens to the set value for air on stage 2 and just before the end of the pre-purging period it goes down to the air setting for stage 1. On some burners under 350kW the pre-purging mainly takes place with the air damper set for stage 1.

4.8 Gas nozzle

Propan

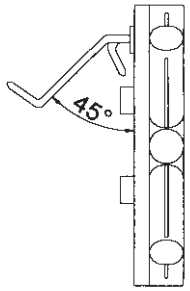

Natural gas

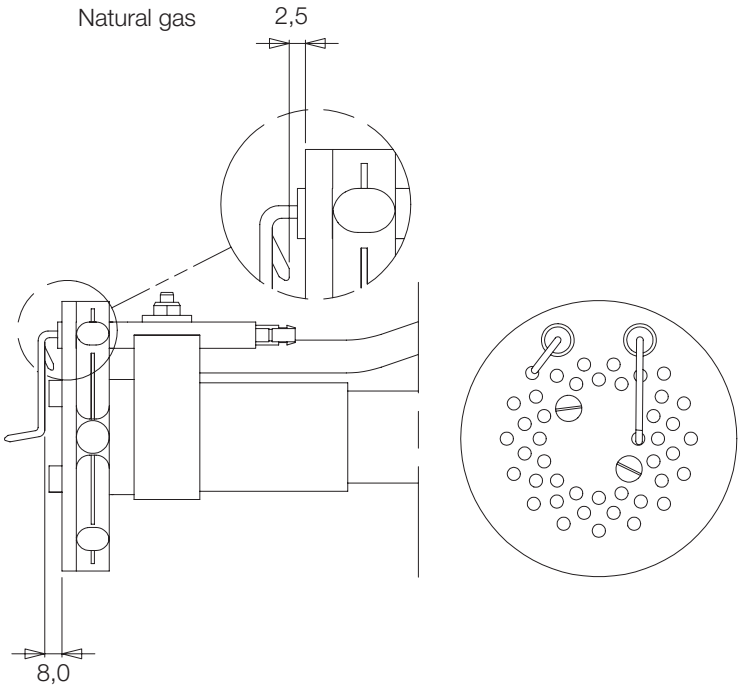

Biogas (UV detector)

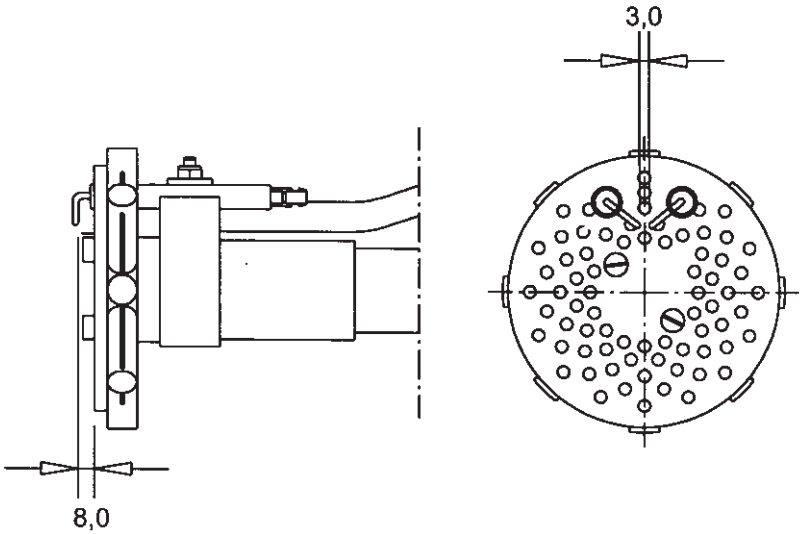

4.9 Setting Damper motor 2-stage

Air adjustment

The damper motor rotates the air damper between three preset positions: completely closed, low load and high load. These positions are controlled in the motor by colored cam discs, the black cam disc controls the switching on/off of the solenoid valve. Adjust the amount of air by changing the position of the cam discs.

Blue cam disc is the limit position for closed air dampers and does not normally need to be changed.

Low load

- Set control switch for load position to position II (high load).
- Turn orange cam disc to 0° to reduce airflow and to 90° to increase airflow.
- Return the control switch to position I (low load) and check the combustion values.

High load

- Set control switch for load position to position I (low load).
- Turn red cam disc to 0° to reduce airflow and to 90° to increase airflow.
- Place black cam disc in a position between red and orange cam discs and adjust to obtain a good load change.
- Return the control switch to position II (high load) and check the combustion values.

Release

By pressing the button, the motor is disengaged and the air damper can be turned. The function is used when servicing air dampers.

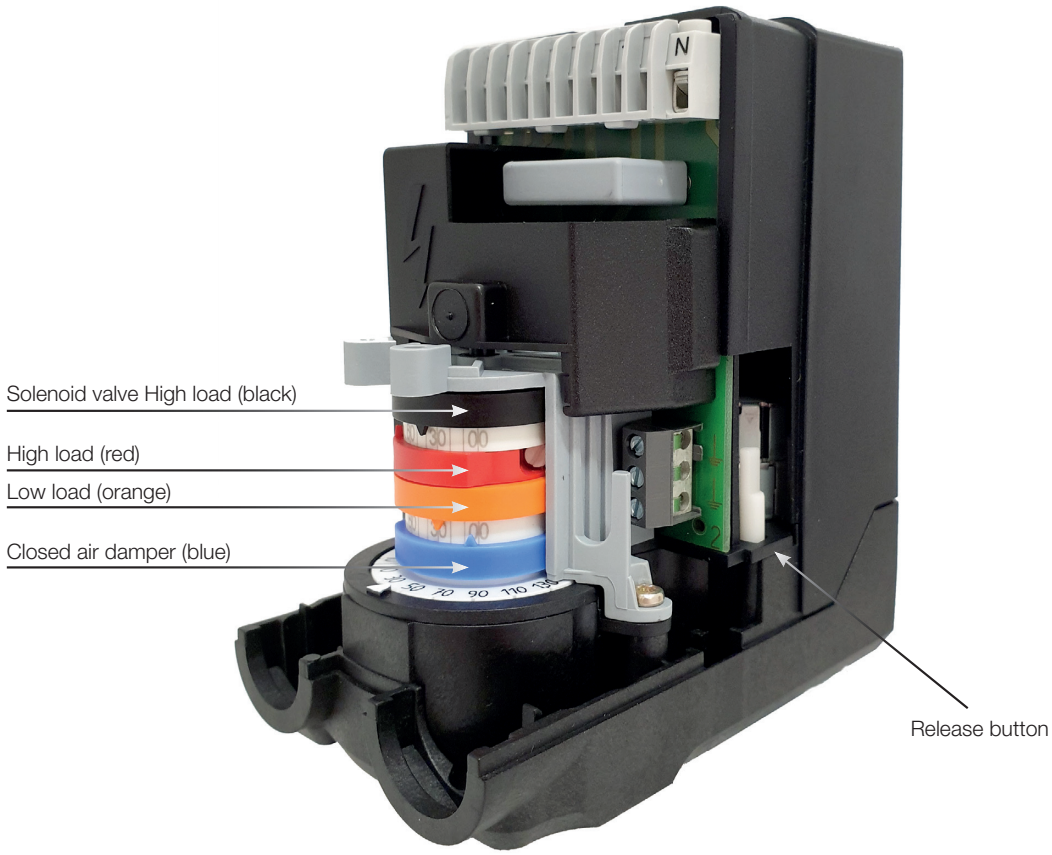

5. Setting the burner

5.1 Adjustment of brake plate

-Loosen the screw on the adjustment device.

-To reduce the opening: turn the knob to the left.

-To increase the opening: turn the knob to the right.

The adjustment of the position of the brake plate affects the air flow. It is therefore always necessary to make a fine adjustment of the air by means of the adjustment device of the burner.

5.2 Control of burner head

To check the burner head, brake plate and electrodes proceed as follows:

Loosen the nuts a. Swing out the burner. Remove the screw b and the knob for adjustment of burner head. Loosen the screw c so much so that the inner assembly can be pulled out.

Adjustment of inner assembly

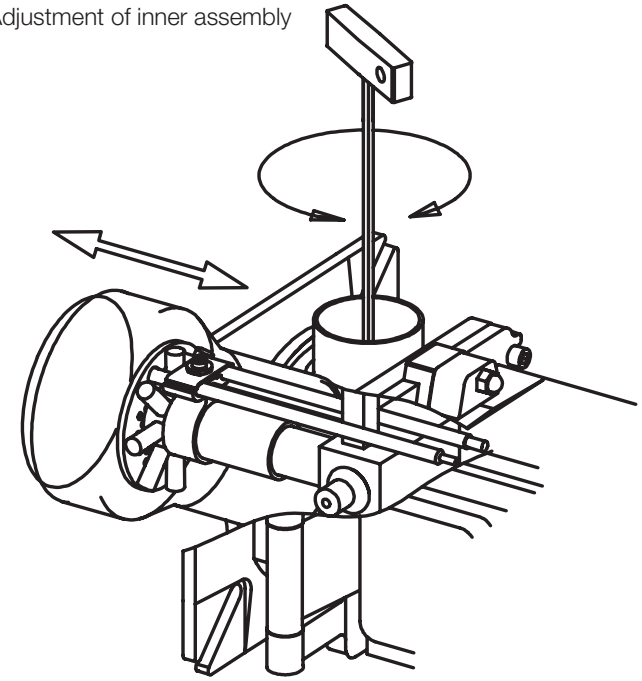

Control of burner head

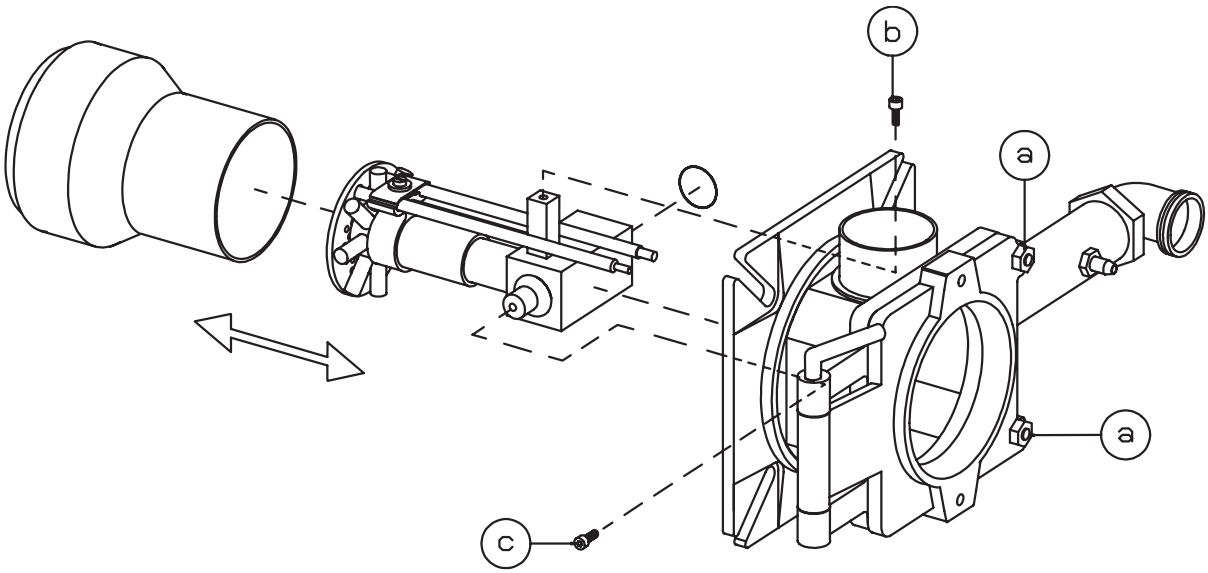

General instructions

The installation of the gas burner must be carried out in accordance with current regulations and standards. The installers of gas burners should therefore be acquainted with all regulations and ensure that the installation complies with the requirements. The installation, mounting and adjustment should be made with the greatest care and only the correct gas should be used.

Operating instructions

The installation and maintenance instructions supplied with the burner must be kept at an easily accessible location in the boiler room.

Instructions

The user should be thoroughly in-structed in the function of the gas burner and the whole installation. The supplier must instruct the user.

Inspection and maintenance

Inspection as needed, preferably daily. Maintenance per service schedule.

Start up

After the burner has been fitted to the boiler and the electric connection, the leakage control, the venting and the electric function test have been carried out, the burner will be ready for start-up.

Howerer, study the sections dealing with adjustments of multi-bloc, combustion air and combustion head.

Open the ball valve and switch on the main switch. If the burner starts the actual adjustment can be made.

Adjustment of burner head

The burner is equipped with an adjustment device changing the position of the brake plate in the burner head. This is used to adjust the correct pressure drop over the combustion device in order to obtain a good pulsation free combustion.

Which position to use depends on input and overpressure in the boiler.

A general rule is that the lower capacity the smaller the opening between brake plate and combustion device.

Commissioning of installation

Control of the combustion. The combustion quality is checked by means of a flue gas analysis device. Adjust the burner to appr. 20% excess air in accordance with the table. Check the flue gas temperature. Calculate the efficiency. Check also the actual gas volume on the gas meter so that the correct input is achieved

Service

Service should only be carried out by qualified personnel. Replacement parts should be of the same make and approved by the same authorities as the original. If the burner is converted to fire another gas quality it must be re-commissioned. If town gas is to be fired the combustion head must be converted and the gas train adjusted to suit (e.g.a larger gas armature or a different spring in the governor may be required).

Gas quality	CO_2% lambda 1,2	0_2%	max. CO_2%
Natural gas	10,0	4±1	11,9
LPG	11,5	4±1	13,9

5.3 Setting the air pressure switch

The air pressure switch should block the burner if the air quantity supplied for combustion is insufficient. The air pressure switch must be set so that, if there is a defective air supply at the burner's max. or min. capacity, it reacts before the monitored pressure falls so much that it results in poor combustion.

Inställningsområde ca:

LGW 10	1-10	mbar
LGW 50	2,5-50	mbar

Setting for air pressure switch

1. Remove the protective cover, screw (Y).

> **!** Be careful when adjusting the air pressure switch; it contains a live component.

2. Start the burner.
3. Carefully turn the scale on the air pressure switch clockwise until the air pressure switch stops the burner. **Is the tolerance on the scale for the min. air pressure switch approx. ±15%?**
4. Try to find the pressure at which the burner stops for both the minimum and maximum input power by turning the scale. Make a note of the values and then set the air pressure switch on the basis of the highest pressure noted at which the burner stopped.
5. The air pressure switch should be set to a pressure approx. 10–15% lower than the highest noted pressure at which the burner stopped.
6. After setting the air pressure switch, perform repeated starts and run through the burner's set output range several times. This is to ensure the reliable function of the burner. If breakdowns or interruptions occur, the air pressure switch is probably set to a too narrow position.
7. Fit the protective cover, screw (Y).

5.4 Setting the min. gas pressure switch

The min. gas pressure switch should react to a burner connection pressure that is too low and in such cases prevent the burner from starting. If the connection pressure to the burner is too low during operation, the min. gas pressure switch should stop the burner. The burner can start again once the connection pressure has risen above the pressure set for the min. gas pressure switch.

Setting for min. gas pressure switch

1. Remove the protective cover, screw (Y).
2. Open the pressure outlet (X) and connect a manometer to measure the connection pressure.
3. Start the burner.
4. Measure and make a note of the connection pressure to the burner during normal operation at the highest input power.
5. Based on the desired connection pressure set, determine the connection pressure at which the gas pressure switch should stop the burner. Set the connection pressure at which the burner is stopped at a level where the burner is stopped before poor combustion occurs.
6. Set the min. gas pressure switch to this value by turning the scale.
7. Check the setting by carefully closing the ball valve while measuring the connection pressure.
8. When the min. gas pressure switch stops the burner, the value measured should then approximately correspond to the setting on the min. gas pressure switch. The tolerance on the scale for the min. gas pressure switch is approx. ±15%.
9. Open the ball valve.
10. Remove the pressure gauge and close the pressure outlet (X).

> **!** Check the gas tightness.

11. Fit the protective cover, screw (Y).

5.5 Skeleton diagram, biogas 2-stage burner

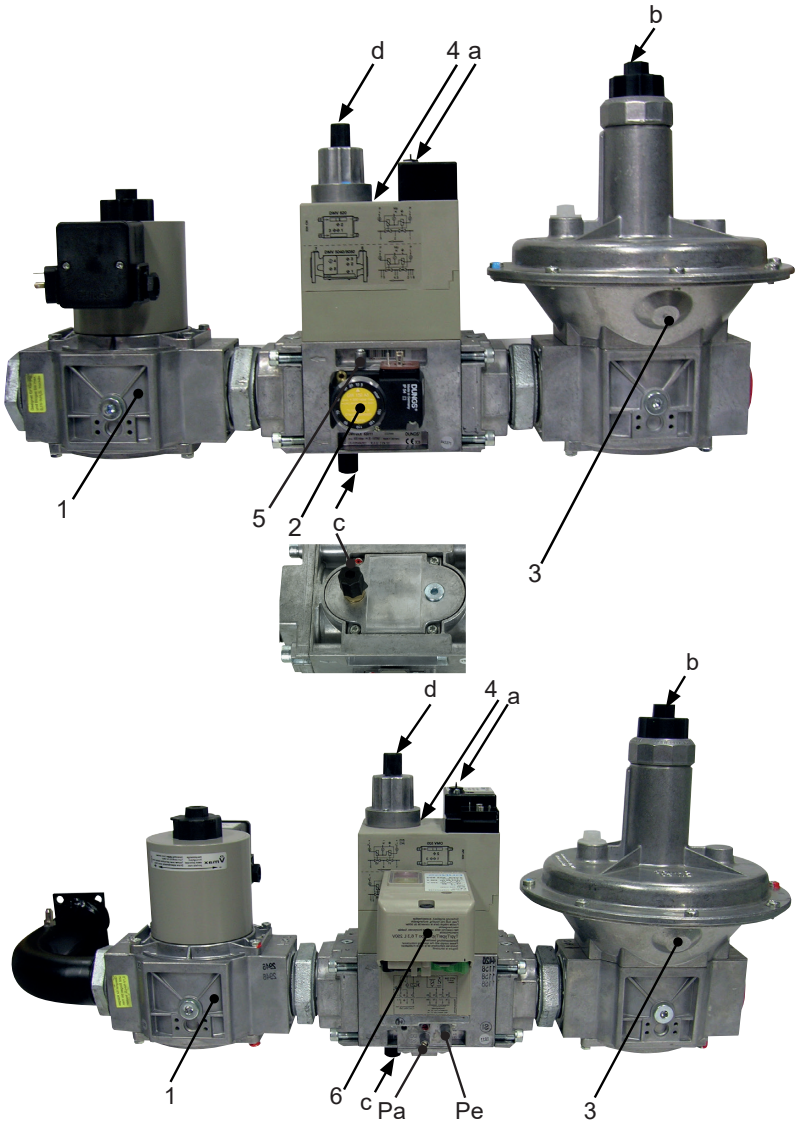

1. Safety valve on-off
2. Gas pressure switch
3. Governor FRS shall be be fitted with separate filter
4. Twin solenoid valve
5. Governor pressure
6. Valve proving system (VPS)

Pe Pressure before valve
Pa Pressure between valves

Adjusting points

a. Main flow restrictor stage 2 (max load)
b. Gas pressure adjustment
c. Main flow restrictor stage 1(min load)
d. Hydraulic brake stage 1 to 2

5.6 Adjusting the Gas Train

The burner is test-run with propane prior to delivery. During operation, the safety valve (1) must be fully open.

When adjusting Stage 1 on the burner, valve 2 must be opened using the adjustment screw (c). When this is screwed in, the flow of gas to the burner increases by lifting the valve. During initial setting, the valve must have been lifted by the adjustment screw after 1-2 turns. This valve is always open and this opening is what determines the minimum load.

When adjusting Stage 2 is done using the adjustment screw (a) which controls the opening of valve 1.

At start-up, the safety valve opens and valve 1 gas flows through valve 2, which was opened using adjustment screw C. The burner now receives gas for the minimum load. Increase the load to Stage 2 and set the output on the burner.

Output is adjusted at Stage 2 by opening valve 1 using adjustment screw A and adjusting the gas pressure on pressure regulator screw B. The air damper must also be adjusted to ensure that the correct volume of air is obtained. Once the correct output and pressure are set in Stage 2, move on to Stage 1. Stage 1 is now adjusted using adjustment screw C to ensure that the correct volume of gas is obtained. Adjust the air damper for correct combustion.

VPS: Standard on burners with an output ≥ 1200 kW. Optional on burners with an output < 1200 kW.

6. Gas pressure regulator Type FRS

Nominal diameters
Rp 3/8 - Rp 2 1/2
DN 40 - DN 150

> **!** Never close vent nozzle!

Pressure taps

1. Vent plug
2. Connection for external pulse G 1/4 screw plug ISO 228, on both sides, optional.
3. G 1/4 screw plug ISO 228, in inlet pressure range, on both sides

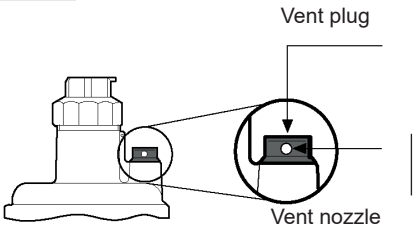

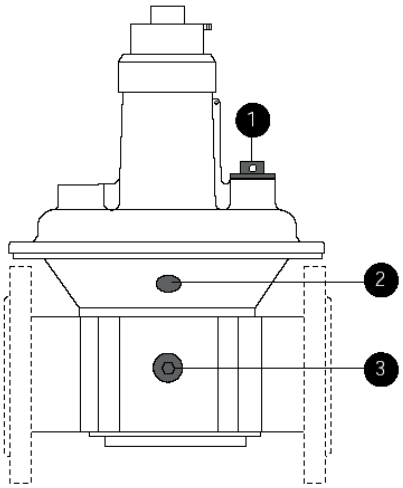

Max. operating pressure	500 mbar
Pressure regulator	Class A
Ambient temperature	-15 °C … +70 °C
Inlet pressure range	5 - 500 mbar
Family	1 + 2 + 3
Outlet pressure range	2,5 - 200 mbar

Adjustment of outlet pressure (setpoint adjustment)
Factory setting: Standard spring p 2 10-30 mbar

1.

1. Unscrew protective cap A.
2. Adjustment (+) Setting spindle B ”Turn counter-clockwise” = Increasing outlet pressure (setpoint)

or

2.
Adjustment (-) Setting spindle B ”Turn clockwise” = Reducing outlet pressure (setpoint)

4. Check setpoint

5. Screw on protective cap A.

6. Attach lead seal (Page 5).

1.

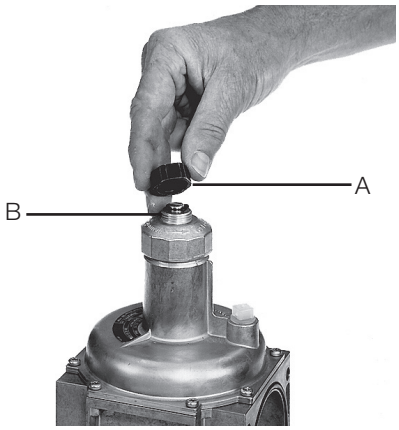

2.

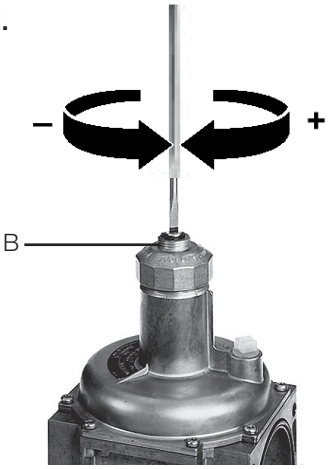

Replace setting spring 3-4

1. Remove protective cap. A. Release spring by turning adjustment spindle B counter clockwise. Turn spindle to stop.
2. Unscrew complete adjustment device B and remove spring C.
3. Insert new spring D.
4. Assemble complete adjustment device and adjust desired off-set.
5. Screw on protective cap A. Stick adhesive label E onto typeplate.
6. Attach lead seal.

3.

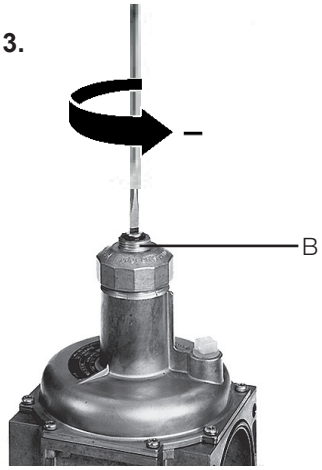

4.

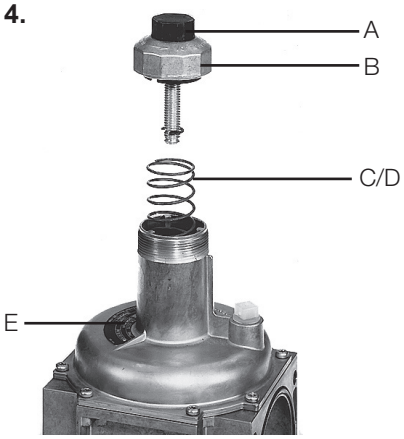

6.1 Double Solenoid valve Type DMV-D.../11 Type DMV-DLE.../11

Nominal widths
Rp 1/2 - Rp 2
Electrical connection IEC 730-1
(VDE 0631 T1)

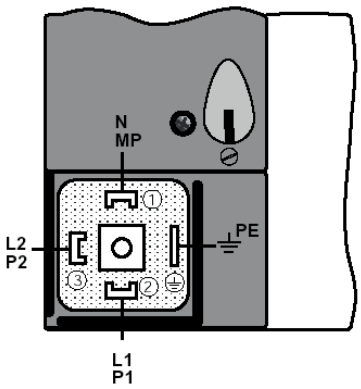

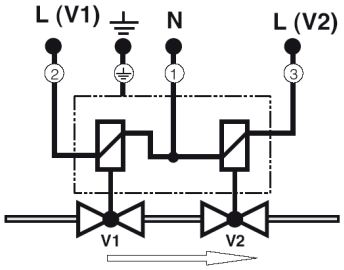

Volt	U n ~(AC) 230 V
Valve	2 x Class A
Ambient temperature	-15 °C ... +60 °C
IP	54
Family	1 + 2 + 3
Max. operating pressure	500 mbar

DMV 505-520/11

Pressure taps 1, 2, 3, 4 Sealing plug

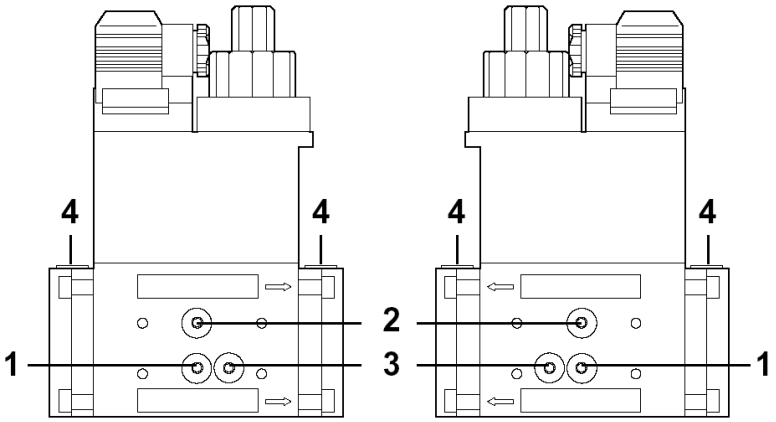

Screw plugs 1,2,3 may also be replaced by a measuring socket

G 1/8 DIN ISO 228.

Concealed connecting bore for system accessories.

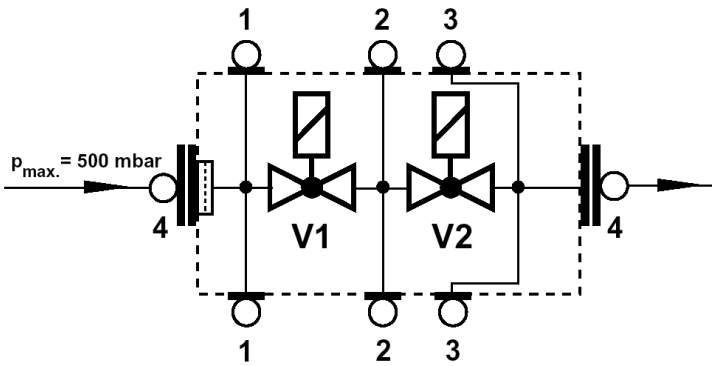

6.

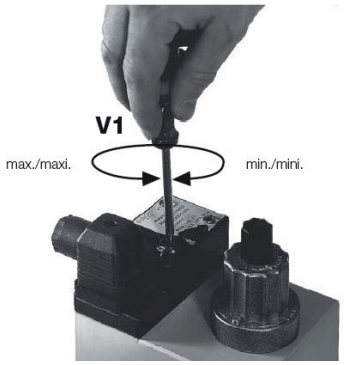

6. DMV - D 507/11 - 525/11 DMV-DLE 507/11 - 525/11 Main flow setting only possible at V1! Set main volume on open valve. Set valve V1 during operation.Check setting values continuously. Smallest setting volume flow:

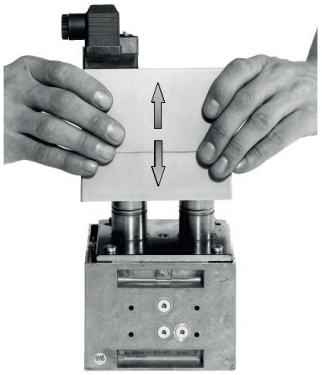

9. Replacing the solenoid Versions with adjusting plate DMV-D 5.../11or hydraulic brake DMV-DLE 5../11

1. Remove hydraulic brake or adjusting plate as described on page 6: ”Replacing the hydraulic brake or adjusting disk”, steps 1 - 5.
2. Replace solenoid
   Important: Make sure that the solenoid no. and voltage are correct!
3. Remount hydraulic brake or adjust-ing plate as described on page 6. ”Replacing the hydraulic brake or adjusting plate”, steps 7 -11.

7.

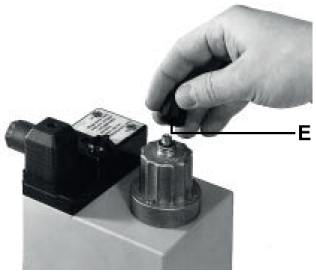

7. DMV-DLE Rapid stroke adjustment V start Factory setting DMV-DLE: Rapid stroke not adjusted

1. Unscrew the adjustment cap E from the hydraulic brake.
2. Turn the adjustment cap and use as a tool.
3. Turn a-clockwise = increase rapid stroke (+).

8.

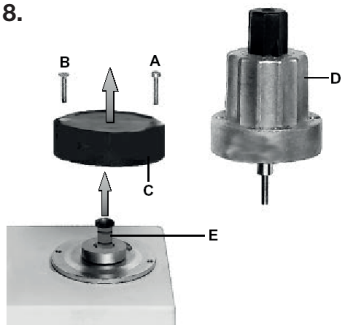

8. Replacing hydraulic brake unit or adjustment plate

1. Switch off firing system.
2. Remove locking varnish from countersunk screw A.
3. Unscrew countersunkscrew A.
4. Unscrew socket headscrew B.
5. Raise adjustment plate C or hy-draulic brake D.
6. Remove sealing plug E
7. Exchange adjustment plate C or hydraulic brake D
8. Screw in countersunk and socket head screw. Only tighten socket head screw so that hydraulic brake can just be turned.
9. Coat countersunk screw A with locking varnish.
10. Leakage test: Pressure tap at sealing plug 2:
    DMV 507-520/11 Pressure tap at sealing plug 3: DMV 525/11 p max. = 500 mbar.
11. Perform functional test.
12. Switch on firing system.

6.2 Adjustment of gas solenoid valve dungs MVD

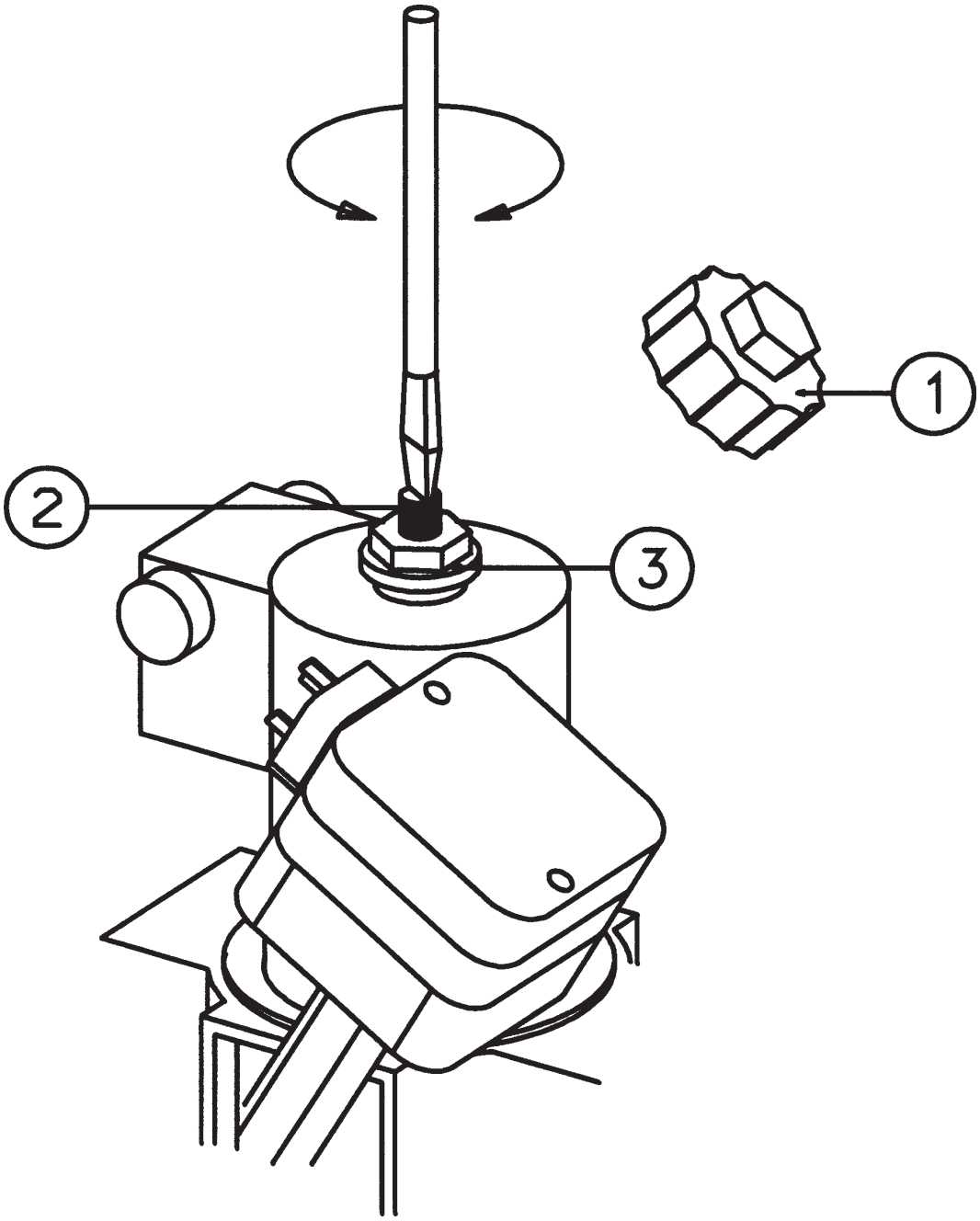

MVD:

1-step valve fast opening with max. flow adjustment.

Protection cover
Flow adjustment
Lock nut

Flow adjustment MVD/5

Remove protection cover 1. Loosen lock nut 3. Turn the flow adjustment screw 2 to the right = gas flow decrea-ses or to the left = gas flow increases. Tighten the lock nut.

6.3 Recommended excess air when using default setting

Grade of gas	Excess air flue gases		Max. % CO_2
	% O_2	% CO_2 Lambda 1.2	
Natural gas	3–5	≈10	11.9
Propane	3–5	≈11.5	13.9
Butane	3–5	≈11,5	14,1
Biogas	3–5		

6.4 Determining the gas quantity for the system

The heat values indicated are normal values; the heat value varies according to the origin of the gas. For more exact information on values, contact the gas distributor.

Lower heat value Hu at normal state 15°C and 1013.25 mbar EN676				
Grade of gas		kWh/Nm^3	MJ/Nm^3	kcal/Nm^3
Natural gas	G20	9.5	34.02	8126
Natural gas	G25	8.2	29.25	6986
Butane	G30	32.5	116.09	27728
Propane	G31	24.6	88.00	21019
Biogas		6,0	21,60	5159

6.4.1 Example of how to calculate the gas quantity (natural gas G20):

V_0 =	Desired quantity of gas	[Nm^3/h]
Q =	Boiler output	[kW]
H_U =	Gas heat value	[kWh/Nm^3] or [MJ/Nm^3] or [kcal/Nm3]
η=	Boiler efficiency	[%]

Calculation example:

Q = 160 kW

H_U = Example A: 34020 MJ/Nm^3

Example B: 9.5 kWh/Nm^3

Example C: 8126 $kcal/Nm^3$

η = 90%

$$\text{Example A } V_{0A} = \frac{Q \cdot 3600}{H_u \cdot \eta} = \frac{160 \cdot 3600}{34020 \cdot 0.90} \approx 18.8\ Nm^3/h$$

$$\text{Example B } V_{0B} = \frac{Q}{H_u \cdot \eta} \approx \frac{160}{9.5 \cdot 0.90} \approx 19\ Nm^3/h$$

$$\text{Example C } V_{0C} = \frac{Q}{H_u \cdot 0{,}00116 \cdot \eta} = \frac{160}{8126 \cdot 0.00116 \cdot 0.90} \approx 19\ Nm^3/h$$

If the barometer reading (altitude), pressure and temperature of the gas deviate significantly from normal values, this must be taken into account as follows:

T =	Temperature of gas at the gas meter	[°C]
B =	Barometer reading	[mbar]
P =	Pressure of gas at the gas meter	[mbar]
f =	Factor calculated for multiplication with flow in Nm^3/h to arrive at actual flow in Nm^3/h.	
V =	Actual flow	[m^3/h]

$$f = \frac{273}{273+T} \cdot \frac{B+P}{1013.25}$$

Calculation example:

T = 15°C

B = 945 mbar

P = 15 mbar

$$f = \frac{273}{273+15} \cdot \frac{945+15}{1013.25} \approx 0.90\ Nm^3/h$$

This means that the quantity of gas read from the gas meter should actually be read off as 1.11 . the calculated flow in a normal state.

$$V = V_0 \cdot f$$

$$V_A = V_{0A} \cdot f = 18.8 \cdot 0.90 \approx 17\ m^3/h$$

$$V_B = V_{0B} \cdot f = 19 \cdot 0.90 \approx 17\ m^3/h$$

$$V_C = V_{0C} \cdot f = 19 \cdot 0.90 \approx 17\ m^3/h$$

6.5 Calculating the quantity of gas supplied

The quantity of gas supplied can be calculated if the system is equipped with a gas flow meter of some type. The procedure here is usually to measure how long it takes for the burner to consume a certain quantity of gas.

To measure:

t = Time for a certain quantity of gas consumed by the burner. [h]

M = Quantity of gas consumed. [m^3]

V = Actual gas flow [m^3/h]

$$V = \frac{M}{t}\ [m^3/h]$$

Calculation example:

t = 1 min 10 s

M = 330 dm^3 (litre)

$$M = \frac{330}{1000} = 0.33\ m^3$$

$$t = \frac{1}{60} + \frac{10}{3600} = 0.0194\ h$$

$$V = \frac{M}{t} = \frac{0,33}{0.0194} \approx 17\ m^3/h$$

7. Service

Whoever carries out service and maintenance on the burner must be authorised to do so. If components need to be replaced, the replacements must be of the same make and type and be approved by the authorities. If the burner is to be used for a different grade of gas, a new adjustment must be carried out. If town gas is to be used, it is also necessary to convert the combustion assembly; in some cases the multi-block or valves and gas train may also need to be changed to a larger type.

7.1 Servicing the combustion assembly

Removal and installation

1. Switch off the main power supply and disconnect the Euro plugs from the burner.

> **!** If the burner is directly connected, ensure that all components on the burner are without power.

2. Remove the screws (A), turn off the burner Remove the ignition and ionisation cables
3. Check the combustion device's position. Remove the screw (B) to remove the adjustment device.
4. Remove the screw (C), remove the combustion device.
5. Check and clean the brake plate and gas inlet. If necessary, replace the worn parts.
6. Check the ignition electrode (see chapter Gas nozzle). Replace if necessary.
7. Check the ionisation electrode (see chapter Gas nozzle). Replace if necessary.
8. Fit the combustion assembly in reverse order.
9. Press the burner together and lock using the nuts (B).
10. Fit the Euro plugs and turn on the main power supply.
11. Check/adjust the combustion.

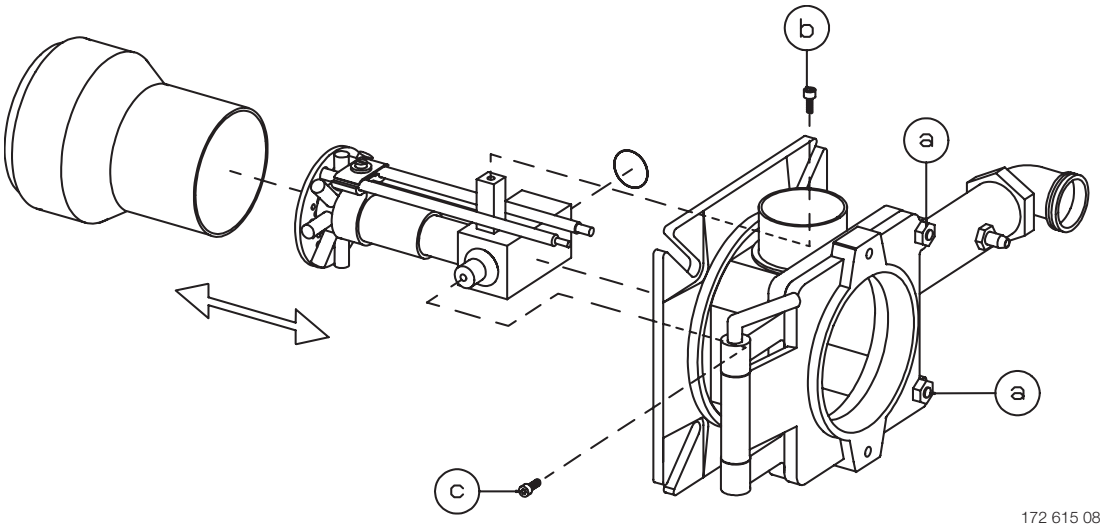

172 615 08 2018-01-03

7.2 Replacement of damper motor, air

Removal and installation

1. Break the main current and disconnect the Euro plugs from the burner.

> **!** If the burner is directly connected, ensure that all components on the burner are without power.

2. Note the connection position of the cables on the damper motor.
3. Disconnect the damper motor cable from the damper motor.
4. Loosen the screws (G) to the damper motor mounting plate.
5. Decouple the damper motor and rotate to approx. 70°.
6. Lift up the damper motor.
7. Loosen the screw (H) and remove the damper from the motor shaft
8. Remove the screws (I) securing the damper motor to the mounting plate.
9. Remove the damper motor from the mounting plate (I).
10. Install the new damper motor on the mounting plate.
11. Mount the damper to the damper motor's shaft. Ensure that the screw is perpendicular to the plane of the shaft.
12. Re-install the damper motor and mounting plate on the air intake. Ensure that the damper shaft and control arm are connected correctly.
13. Connect the damper motor cable.
14. Fit the Euro plugs and turn on the mains power.
15. Check/adjust the combustion.

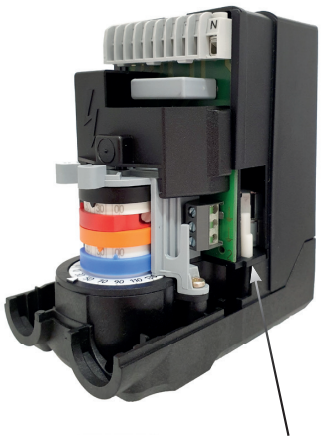

Releasing button

By pressing the button and snapping it down, the motor will be released and the damper can easily be turned. This function facilitates an exchange of damper motor.

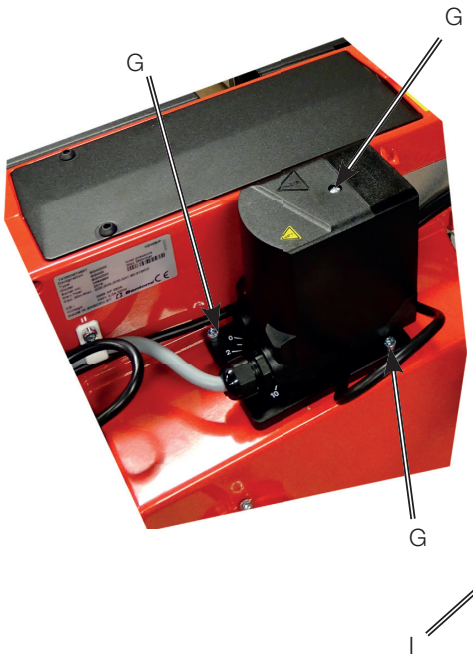

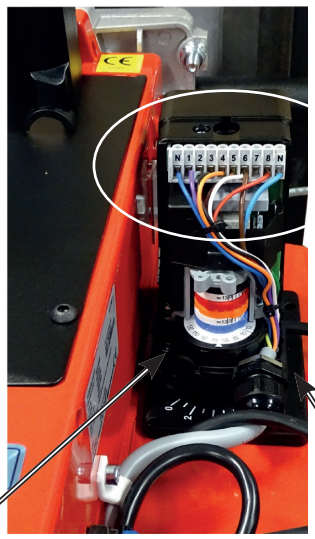

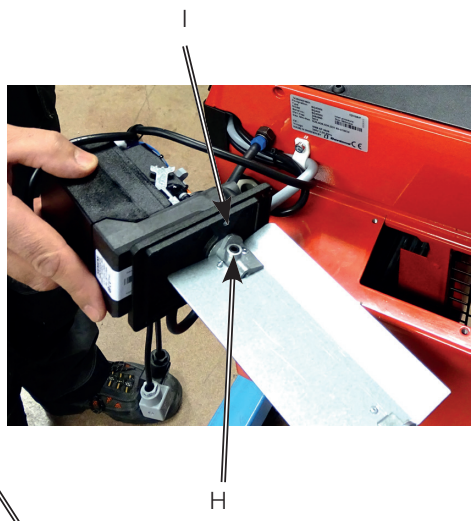

7.3 Flame monitoring and ionisation current check

The standard version of the burner is monitored according to the ionisation principle. The ionisation current should be checked on initial start-up and at each service visit.

Ionisation current is measured using a micro ammeter (µA) connected in series with the ionisation electrode and gas burner control. Connect the µ ammeter according to the diagram. The minimum required ionisation current is shown in the table. In practice, this current must be significantly higher, preferably more than 10 µA. Connection of the µA instrument is made easier by the fact that all gas burners are equipped with a divisible ionisation cable.

The reason for low ionisation current can be leakage current, poor connection to earth, fouling or incorrectly positioned ionisation electrode in the combustion head. Occasionally, an incorrect gas/air mix may result in poor ionisation current.

Technical data

For continuous operation!

Idle voltage at ION-terminals	AC 115-230V
! Protect the ionisation electrode from electric shock!	
Short-circuit current	Max. AC 100-300 mA
Min. current for flame detection	Min. DC 1.5 µA
Required current to ensure detection	Min. DC 3 µA
Possible detection current	Max. DC 20 µA
Operational indicator lamp flashes green	<5 µA DC
Operational indicator lamp shines green	>5 µA DC

7.3.1 Flame monitoring ionisation

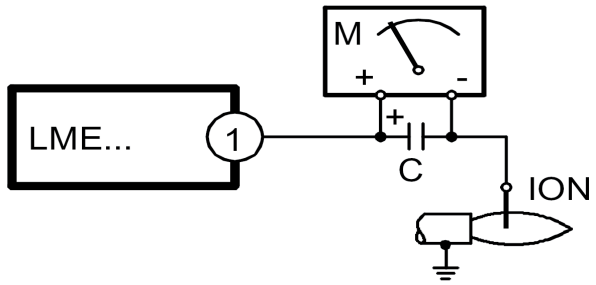

172 615 02-2

7.3.2 UV –detector (QRC)

Should not be exposed to temperatures higher than 60 °C. The current passing through the UV-detector, when it is lighted, should be at least 70 µA. The current can be measured with a moving coil instrument. A check is necessary only if a malfunction is suspected.

7.3.3 Flame monitoring UV-detector (QRC)

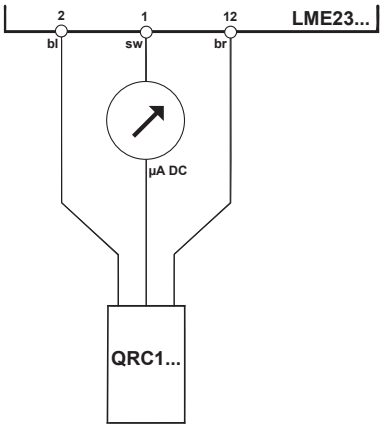

Technical data

For continuous operation!

Idle voltage at ION-terminals	AC 115-230V
! Protect the ionisation electrode from electric shock!	
Short-circuit current	Max. AC 100-300 mA
Max. current for flame detection	Max. DC 5.5 µA
Required current to ensure detection	Min. DC 40 µA
Possible detection current	Max. DC 60 µA
Operational indicator lamp flashes green	<45 µA DC
Operational indicator lamp shines green	>45 µA DC

8. Handing over of the installation

- Make repeated start attempts to ensure that the adjustments function.
- Close the ball valve during operation to check that the gas switch switches off at the set value.
- Remove the hose for the air pressure switch to check that the burner locks out.
- Check that all protective covers and measurement nipples are mounted and fastened.
- Fill out necessary test reports.
- Instruct the persons in charge of the operation on the service and maintenance of the installation and what to do should any troubles occur.
- Inspection and service must be carried out by authorized personnel.

! Review and service should be performed by authorised personnel only.

9. Fault location, functional troubles

Trouble free operation is dependent on three factors: electricity, gas and air supply. Should there be any changes in the ratio between these three factors there is a risk of break downs. It has been proved that most break downs are caused by simple faults. Before calling the service engineer, the following should therefore be checked:

- Is the gas cock open?
- Are all fuses in order and the current switched on?
- Are the thermostats correctly set?
- Are pressostats, overheating protection etc. in operating position and not locked-out?
- Is the gas pressure sufficient?
- Is the gas burner control in start position?
- Has the gas control or the motor protector locked out? - Reset.
- Is the circulation pump in operation?
- Is there a supply of fresh air to the installation?
- If integral components are of a different make from what is stated in this manual, see the enclosed loose-leaf.

10. Electric equipment

10.1 Safety system

Safety systems must be installed in accordance with regulations that are applicable for the appliance. This may differ according to the process burner are installed in to. Se local regulations for information.

Safety system cables must be run in separate cables outgoing signal must not come in same cable as incoming signal. Signals must be in different harnesses for safety reasons.

Safety system as door switches, water level, pressure, temperature and other safety limiters must be installed in safety loop according to process.

10.2 Wiring diagram LME

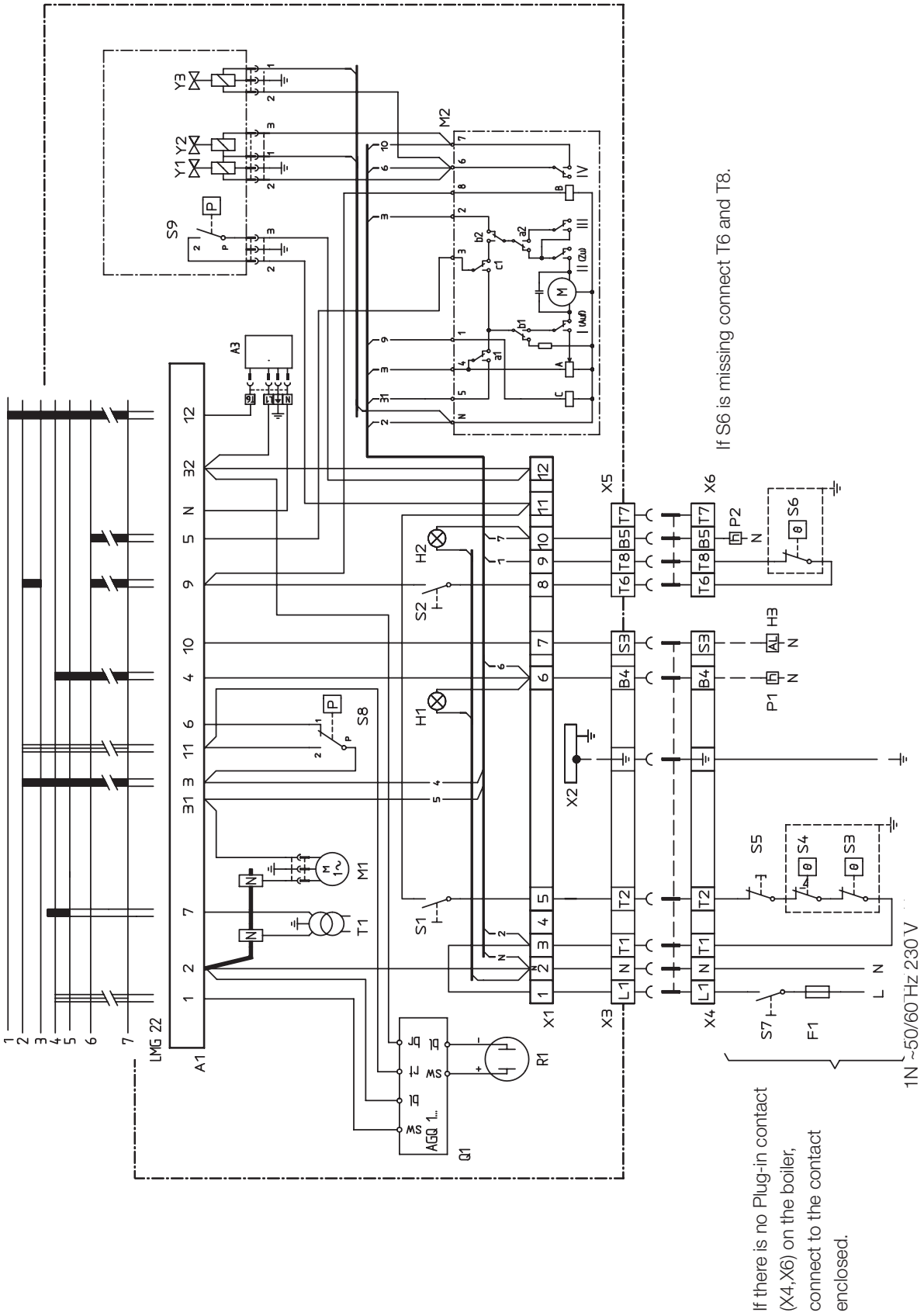

10.2.1 List of components

A1	Gas burner control
A3	Valve, leak tester, Dungs VPS504
F1	Operating fuse
H1	Lamp, low capacity
H2	Lamp, high capacity
H3	Alarm signal 230 V
M1	Burner motor
M2	Damper Motor, L&S SQN75.254.A21B
P1	Time meter, total operating time
P2	Time meter, high capacity, total operating time
Q1	Signal amplifier AGQ
R1	UV-Detector
S1	Operating switch
S2	Operating switch, stage 2
S3	Control thermostat
S4	Temperature limiter
S5	Micro switch for hinged door
S6	Control thermostat, stage 2
S7	Main switch
S8	Air pressure switch
S9	Gas pressure switch
T1	Ignition transformer
X1	Connection terminal board
X2	Earth terminal
X3	Plug-in contact, burner
X4	Plug-in contact, boiler
X5	Plug-in contact, stage 2, burner
X6	Plug-in contact, stage 2, boiler
Y1	Gas solenoid valve 1
Y2	Gas solenoid valve 2
Y3	Safety solenoid valve

10.3 Function LME...

1.	**Operating switch ON-Thermostat ON-Gas pressure switch ON** A check that the air pressure switch **does not** indicate fan pressure is carried out
2.	**Burner motor starts** A check that the air pressure switch indicates sufficient fan pressure is carried out
3.	**The ignition spark is created**
4.	**The gas solenoid valve is open** The gas is ignited. The ionisation electrode now indicates a flame
5.	**The safety time expires** The ignition spark ceases. The safety period ceases. If the spark is missing or it disappears after this time limit, the gas burner control is blocked
6.	**Operating position**
7.	**Stop** The operation of the burner can now be stopped with the control switch or thermostat
	If the gas burner control is blocked Red light in the gas burner control is lit. The burner is restarted by pushing the reset button

! Mains connection and fuse in accordance with local regulations.

10.3.1 Technical data

	LME22.232C2E
Preignition time	3 s
Prepurge time	20 s
Postignition time	2.5 s
Safety lockout time	< 3 s
Reset time after lockout	< 1 s
Reaction time on flame failure	< 1 s
Min. ionisation current at flame	5 µA
Max. ionisation current	20 µA

160303-325

10.4 Control program at faults; fault mode indicator LME ....

10.4.1 Colour codes

Table colour codes for multi-coloured signal light (LED)		
Status	Colour codes	Colours
Waiting period «tw», other waiting periods	○.....	Off
Ignition phase, ignition controlled	•○ •○ •○ •○ •○ •	Blinking yellow
Normal operation	□.....	Green
Operation, poor flame signal	□○□○□○□○□○	Blinking green
Illegal flame signal during start-up	□▲□▲□▲□▲□▲	Green-Red
Undervoltage	●▲●▲●▲●▲●▲	Yellow-Red
Fault, alarm	▲.....	Red
Blinking code for fault codes	▲○ ▲○ ▲○ ▲○	Blinking red
Interface diagnostics	▲▲▲▲▲▲▲▲	Red flicking

.....	Continuous
○	Off
▲	Red
●	Yellow
□	Green

10.4.1.1 Diagnosing alarm causes

After alarm disconnection, the red alarm signal light is lit continuously.
The diagnosing of the alarm cause can be read according to the following sequence:

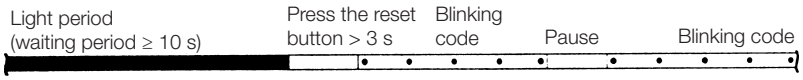

10.4.1.2 Limiting of starting repetitions

LME 11... has a function with start repetition if the flame is not created at start or disappears during operation.. LME 11... allows max. three repetitions during continuous starting cycle.

10.4.1.3 Alarm code table

Red blinking code on signal lamp (LED)	Possible causes
Blinking 2 x ..	No flame creation at End of “TSA” - defective or fouled flame monitoring - defective or fouled fuel valves - poor burner setting - defective firing device
Blinking 3 x ...	“LP” defective - No air pressure switch signal after “t10” - “LP” is welded in open position
Blinking 4 x	Illegal flame signal during start-up
Blinking 5 x	Time out “LP” - “LP” is welded in open position
Blinking 6 x	Free
Blinking 7 x	Too many flame disappearances during operation - poor burner setting - defective or fouled fuel valves - defective or fouled flame monitoring
Blinking 8 x	Free
Blinking 9 x	Free
Blinking 10 x	Connection fault or internal fault, outgoing contacts or other faults
Blinking 14 x	CPI contact not closed

During the diagnosing of the alarm cause, the control outputs are voltage-free.

- The burner is disconnected
- Exception, alarm signal «AL» at board 10
- Reconnection of the burner happens after resetting only.
- Press the reset button 0.5...3 s

10.4.1.4 Interface diagnostics

To change to interface mode, press and hold the reset button longer than 3 s. To go back to the normal position, press and hold the reset button longer than 3 s. If the gas burner control is in the alarm position, it is reset by pressing the reset button 0.5...3 s.

10.5 Leakage control Dungs VPS 504

Technical data

Test volume	≤	4,0 l
Pressurre increase using motor pumps	≈	20 mbar
Backup (customer supply)		10A fast or 6.3A slow
Fuse integrated in housing, replaceable		T6, 3L 250V (IEC 127-2/111) (DIN41662)
Switching capacity		Operating outputs SO1, SO2, SO4: 4A Faul output T7: 1A Faul output SO4 1, 2, 3, T7: 1A
Release time	≈	10 - 30 s Dependent on test volume and input pressure.
Sensitivity limit		50 l/h
Max. number of test cycles		20 /h

Program sequence

Idle state: Valves 1 and 2 are closed. Pressure buildup: The internal motor pump increases the gas pressure p_e in the section by approx. 20 mbar compared with the input pressure at valve V1. During the test time, the integrated diffferential pressure sensor monitors the test section for leaks. When the test pressure is attained, the motor pump switches off (end of test period). The release time (10-30 s) is dependent on the test volume (max. 4.0 l).

If the test section has no leaks, the contact is released to the control box after approx. 30 s and the yellow LED lights up.

If the test section is leaky or if the pressure increase by + 20 mbar is not attained during the test period (max. 26 s), the VPS 504 generates a fault. The red LED is lit as long as the contact is released by the regulator (heat requirement).

After a short voltage drop during testing or during burner operation, an automatic restart is performed.

Programmer Idle state

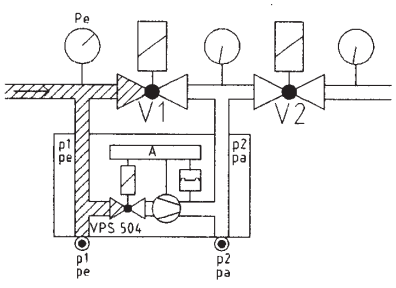

Pressure buildup

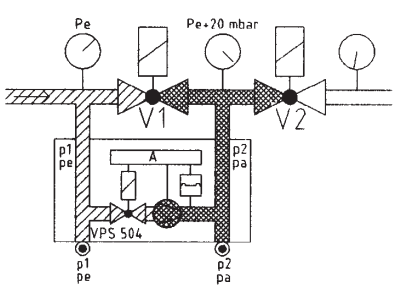

Operation

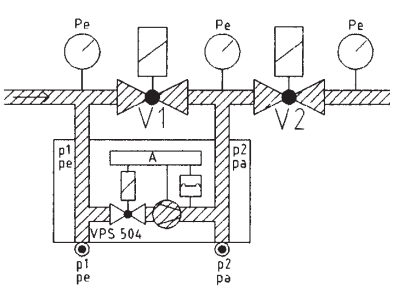

Program sequende schedule

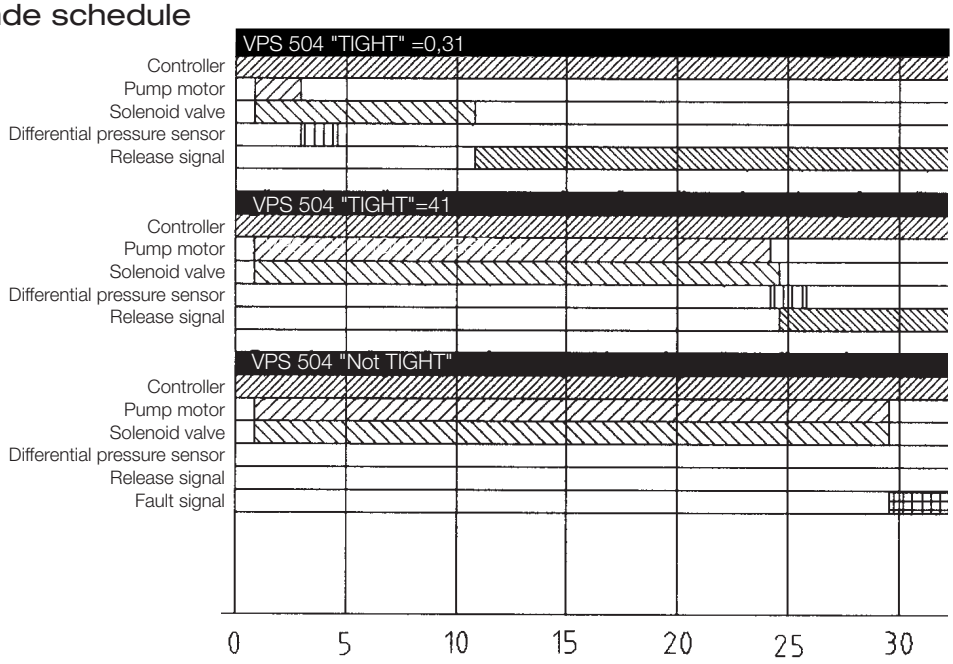

Electrical connection

VPS 504 series 02

The VPS 504 is connected in series between the temperature regulator and the control box via a 7-pin plug connector.

Connect the boiler connector to the connector socket of the VPS 504.

For contact assignment of VPS 504 connector and heat generator connector, refer to wiring diagram.

Switching feature: No isolation between operating voltage circuit and control circuit.

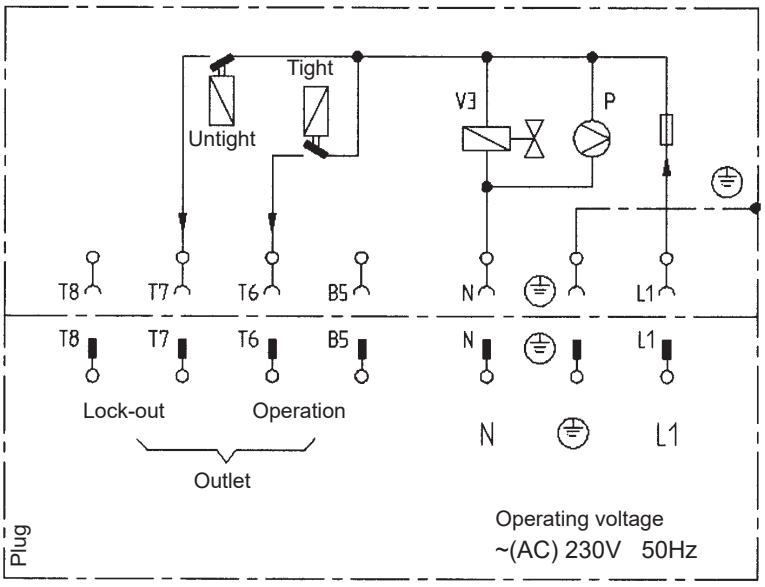

11. Troubleshooting

Gas Burner

Conditions favourable to disruption-free operation of the system can only be guaranteed through the interaction between three factors – electricity, gas flow and combustion air. A change in any of these factors may cause disruptions.

It has been shown that a large proportion of disruptions can be attributed to relatively small things. Therefore, before requesting servicing, you should ascertain the following:

1. Are the system's gas taps open?
2. Are the fuses intact and is the power on?
3. Are control devices (room thermostat, boiler thermostat, etc.) correctly set?
4. Is gas pressure to the burner sufficient?
5. Are the burner controls on standby and not locked?
6. Is air supply to the burner adequate?

Cause of fault	Action
Burner does not start:	
No gas.	Make sure all gas taps are open.
No power.	Check the fuse, thermostat and electrical connections.
Burner motor does not start.	Motor protection has tripped. Motor faulty.
Burner control faulty.	Replace.
Burner motor running, no ignition spark at the end of pre-aeration:	
No power in the terminals.	Check the connector. Replace faulty burner controls.
Ignition electrodes in contact with each other or earth.	Adjust.
Ignition electrode porcelain damaged.	Replace the electrodes.
Poor connection to cable connectors.	Adjust connection.
Ignition cables damaged.	Replace.
Transformer damaged, no power to secondary winding.	Replace the transformer.
Ignition cable and ionisation cable swapped around.	Reconnect.
No flame propagation:	
Gas solenoid valve faulty.	Replace.
Gas solenoid valve does not open despite having power.	Replace solenoid valve terminals, or entire valve.
No power to solenoid valve.	Check the connection.
No electrical connection through air pressure gauge.	Check the air pressure gauge's settings and functions.
Ignition load incorrectly set.	Increase/decrease gas supply Reduce airflow.
Burner control faulty	Replace
Air pressure gauge incorrectly set or faulty	Check the settings and reset, or replace
No acknowledgement signal due to incorrect adjustment or misalignment of the control motor cams.	Check the settings and realign.

Cause of fault	Action
Burner trips after safety time limit despite flame propagation:	
No ionisation current or UV cell incorrectly positioned.	Adjust ionisation electrode and UV cell Check cables and connectors.
Burner control monitor faulty.	Replace burner control.
Voltage lower than 185 V.	Contact an electrician.
Ignition electrodes disrupting ionisation current.	Adjust ignition electrodes. Re-polarise the transformer.
Poor earth connection.	Ensure adequate earth connection.
Phase and neutral swapped around.	Check wiring diagram and change accordingly.
Burner trips during pre-aeration:	
Air sensor faulty or incorrectly set.	Increase/decrease air setting. Reduce air volume.
Ignition load incorrectly set.	Increase/decrease gas supply Reduce airflow.
Gas pressure too low.	Increase pressure. If necessary, contact gas supplier.
Pulsations at start-up:	
Ignition electrodes incorrectly set.	Adjust .
Gas pressure too high.	Check and adjust using pressure gauge and pressure control valve.
Flue gas side blocked.	Check the chimney flue.
Burner pulsates during operation:	
Burner incorrectly set.	Adjust.
Burner dirty.	Clean the burner.
Incorrect chimney.	Check and modify dimensions if necessary.
Burner functioning properly but with occasional blockage:	
Ionisation current too low.	Check. Must be at least 6 µA, but should ideally lie between 8 and 20 µA.
UV cell incorrectly positioned.	Adjust.
Voltage drop at certain times.	Must not drop below 15% of rated voltage. Contact an electrician if necessary.
Incorrectly set or faulty air sensor.	Check the settings and reset, or replace.
Ignition electrode overload.	Replace.
Burner control ambient temperature too high.	Insulate for heat, Max. 60 °C.
Ignition spark too weak.	Check the transformer.
Poor combustion:	
Poor draught conditions.	Check the chimney.
Flue gas temperature too high.	Boiler overloaded Decrease the gas volume, sweep the chimney if necessary.
CO_2 content too low.	Choke the air supply. Check the boiler for any leakages. Choke the draught if too high.

Cause of fault	Action
CO content too high:	
Surplus air when using natural gas and liquefied petroleum (propane, butane).	Choke the air supply.
Poor air supply.	Open the air supply. Check flue gas damper.
Holes in gas nozzle clogged.	Clean.
Poor fresh air intake.	Check and increase.
Flame at incorrect angle due to combustion head out of position.	Check the combustion head and readjust.
Condensation build up in boiler and chimney:	
Flue gas temperature too low or gas volume too low.	Raise the flue gas temperature by increasing gas volume Insulate the chimney.

12. General instructions for gasburners

12.5.1 Installation

1. Follow standards and instructions applicable to the installation of gas burners.
2. Ensure that the electric installation is made in accordance with existing regulations.
3. Check that the fresh air intake of the boiler room is sufficiently dimensioned.
4. Check by studying the data plate that the efficiency of the burner is adapted to the boiler output.
5. Check that the burner is adapted to the gas quality in question.
6. Check that the input pressure of the gas is correct.
7. Check that the dampers of the boiler are open.
8. Check that there is water in the system.
9. Check that thermostats etc. are correctly adjusted.
10. Read the instructions and follow the directions given for the burner as to starting-up and service.

12.5.2 Maintenance

General instructions

1. Keep the boiler room clean.
2. Ensure that the fresh air intake of the boiler room is not restricted.
3. Switch off the current and shut off the gas supply if the burner must be withdrawn from the boile.r
4. Do not use the boiler for burning paper and waste if there is no special arrangement (fire room) for this.

Normal operation

1. Ensure that the air supply to the burner is not obstructed by dust and dirt.
2. Have the installer make a yearly overhaul of the installation so that safety is not jeopardized.
3. Have the installer at the yearly overhaul also adjust the burner to ensure optimal combustion economy.
4. Check periodically that there is water in the system (fill up if necessary) and that thermostats etc. are normally adjusted.
5. Ensure that there is no water or dampness in contact with the burner.

12.5.3 If the burner has stopped

1. Press the reset button of the relay.
2. Check that the max. thermostat has not cut out.
3. Check other thermostats for example room ther mostat, if any.
4. Check that the gas pressure to the burner is sufficient.
5. Check that the electric fuses have not blown.
6. Make a new attempt to start the burner and check the counter of the gas meter to find out whether the solenoid valve opens.
7. If the burner does not start in spite of repeated starting attempts call the installer.

12.5.4 Shut-Off

1. Switch off the current with the main switch.
2. Shut-off the gas supply with the shut-off cock on the burner.

12.5.5 Warning

1. Never keep your face in front of the fire room door when starting up the burner.
2. Do not use naked flame when inspecting the fire room.

Authorized installer::

Address: ---

Telephone: ---

Bentone®

Service- and inspection card

Installation	Boiler	
Name:	Type:	Efficiency kW:
Address:	Burner	
	Type:	Efficiency kW:
Installed by:	Date:	

Date		Governor		CO_2	CO	Fluegas temp	Ionisation current	Pressure		Efficiency
	Nm^3 gas/h							Fire room	Chimney	
Measu-rement		Before	After	%	%	°C	µ A	mbar	mbar	%
	Small Flame									
	Large Flame									
	Measures									

Date		Governor		CO_2	CO	Fluegas temp	Ionisation current	Pressure		Efficiency
	Nm^3 gas/h							Fire room	Chimney	
Measu-rement		Before	After	%	%	°C	µ A	mbar	mbar	%
	Small Flame									
	Large Flame									
	Measures									

Date		Governor		CO_2	CO	Fluegas temp	Ionisation current	Pressure		Efficiency
	Nm^3 gas/h							Fire room	Chimney	
Measu-rement		Before	After	%	%	°C	µ A	mbar	mbar	%
	Small Flame									
	Large Flame									
	Measures									

EU Declaration of conformity

CE

Bentone Gas Burners

Certificate No.	Type	Certificate No.	Type
CE-0123CT1269	BFG 1	CE-0123CT1326	BG 550
CE-0123CT1270	STG 120	CE-0123CT1337	BG 600
CE-0123CT1281	STG 146	CE-0123CT1348	BG 650
CE-0123CT1292	BG 300	CE-0123CT1359	BG 700
CE-0123CT1304	BG 400	CE-0123CT1360	BG 800
CE-0123CT1315	BG 450	CE-0123CT1371	BG 950

This declaration of conformity is issued under the sole responsibility of the manufacturer. The object of the declaration described above is in conformity with:

Gas Appliance Regulation 2016/426/EU

Machinery Directive 2006/42/EC

EMC 2014/30/EU

Restriction of the use of certain hazardous substances (RoHS) Directive 2011/65/EU

References to the relevant harmonised standards used or references to the other technical specifications in relation to which conformity is declared:

EN 676+A2:2008	Excluded Annex J/K. Automatic forced draught burners for gaseous fuels

Additional information can be downloaded at:

www.bentone.com

Enertech AB
Box 309
S-341 26 LJUNGBY

Ljungby, January 26th 2021

Helene Richmond

Managing Director

Enertech AB

Enertech AB. P.O Box 309, SE-341 26 Ljungby.
www.bentone.com

Bentone®