Bentone®

Installation and Maintenance Manual

BG 450-2

LME22.232C2E

MB-ZRDLE 407



MADE IN SWEDEN

Translation of the original instructions.

Keep for future use.

Read carefully before use.

178 163 76-3 CR00607 2024-06-26

1



2

3

exempel example Beispiel

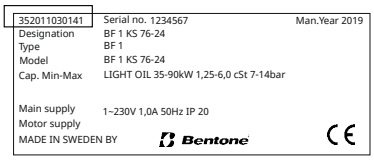

-sv

1. Manualer på övriga språk

2. www.bentone.com\nedladdning eller scanna QR-koden.

3. Skriv in brännarens artikelnummer som finns på din typskylt (se bild) och välj ditt språk.

Detaljerad ecodesign information kan laddas ner på:
www.bentone.com/ecodesign.

-en

1. Manuals in other languages

2. www.bentone.com\download
or scan QR-code.

3. Enter the burner`s article number on your data plate (see picture) and select language.

Detailed ecodesign information can be downloaded at:
www.bentone.com/ecodesign.

-da

1. Manualer på andre sprog

2. www.bentone.com\download eller scan QR-koden.

3. Indtast brænderens artikelnummer, der findes på typeskiltet (se billede), og vælg dit sprog.

Detaljerede oplysninger om ecodesign kan downloades på:
www.bentone.com/ecodesign.

-fr

1. Manuels dans d'autres langues

2. www.bentone.com\download ou scannez le code QR.

3. Saisir le numéro d'article du brûleur sur votre plaque signalétique (consultez l'illustration) et sélectionnez la langue.

Des informations détaillées sur l'écodesign peuvent être téléchargées à l'adresse:
www.bentone.com/ecodesign.

-de

1. Gebrauchsanweisungen in anderen Sprachen

2. www.bentone.com\download
oder scannen Sie den QR-Code.

3. Geben Sie die Artikelnummer des Brenners auf Ihrem Typenschild ein, (siehe Bild) und wählen Sie die Sprache aus.

Detaillierte Informationen zum Ecodesign können unter
www.bentone.com/ecodesign
heruntergeladen werden.

Table of contents

1. General Information 5
1.1 Delivery inspection 5
1.2 Safety 5
1.3 What to do if you smell gas 6

2. Technical data 7
2.1 Dimensions BG 450-2 7
2.3 Gas categories, approved gases 8
2.4 Technical specification 8
2.2 Capacity range 8
2.5 Working field 9
2.6 Components 10
2.7 Skeleton diagrams 11

3. Electric equipment 12
3.1 Safety system 12
3.2 Wiring diagram 12
3.3 Function 13
3.4 Control program at faults; fault mode indicator LME 14

4. Installation 16
4.1 General instructions 16
4.2 Instructions 16
4.3 Inspection and maintenance 16
4.4 Preparation for assembly 16
4.5 Gas supply 16
4.6 Electric connection 16
4.7 Handling and lifting instruction 17

5. Mounting 18
5.1 Gas nozzle 19
5.2 De-aerating 20
5.3 Leakage control 20
5.4 Calculation of gas flow 21

6. Settings 22
6.1 Setting the combustion assembly 22
6.2 Startup 22
6.3 Control of combustion 22
6.4 Setting the air pressure switch 23
6.5 Setting the gas pressure switch, min 24
6.6 Settings Damper motor, 2-stage 25

7. Gas valve, MultiBloc ZRDLE 405-420 26

8. Service 29
8.1 Burner Service Schedule, Gas 29
8.2 Component replacement intervals 29
8.3 Combustion device 30
8.4 Air damper 31
8.5 Replacement, Damper motor air 32
8.6 Fan 33
8.7 Vibrations 34
8.8 Control of flame monitoring and ionization current 35
8.9 Replacement of electrical components 37

9. Handing over of the installation 38

10. Troubleshooting 39

11. Service- and inspection protocol 41

1. General Information

The burner may only be used for its intended purpose in accordance with the product's technical data.

We reserve the right to make design changes and cannot be held liable for any misprints or typographical errors.

Modifying the design or using accessories or components that have not been approved by CTC in writing is strictly prohibited.

This Installation and Maintenance manual:

- is to be regarded as part of the burner and must always be kept near the installation site.
- must be read prior to installation.
- is intended for use by authorised personnel.

1.1 Delivery inspection

- Make sure everything is delivered and the goods have not been damaged during transit. Transport damage should be reported to the shipping company.
- If something is wrong with a delivery, report it to the supplier.

1.2 Safety

- before installation:



- Installation and work on the burner and associated system components may only be carried out by persons who have undergone relevant training.
- The product is packaged to prevent damage from occurring when handled – Handle the product with care! Lifting equipment must be used to lift larger packages.
- The products must be transported/stored on a level surface in a dry environment, max. 80% relative humidity, no condensation. Temperature -20 to +60 °C.

- installation:

- The burner must be installed in accordance with local regulations for fire safety, electrical safety, and fuel distribution.
- The premises must comply with local regulations pertaining to use of the burner and must have adequate air supply.
- The installation site must be free of chemicals.
- Fire extinguisher with Class BE recommended.
- Make sure when installing the burner that there is enough space to service the burner.
- The electrical installation must be professionally carried out in accordance with current mains electricity regulations and in a professional manner.
- Make sure that the burner is suitable for the application (see Technical Data).
- All components must be installed without being bent, twisted or subjected to mechanical or thermal forces that affect components.

- Care must be taken by the installer to ensure that no electrical cables or fuel lines are pinched or otherwise damaged during installation or service.
- Sharp edges can occur on, for example: flame tube, fan wheel and air damper.
- The gas outlet from the pressure regulator must be configured in accordance with applicable regulations and lead to a safe area.

- before first start:

- The burner must not be put into operation without proper safety and protection devices.
- Permitted ambient temperature during operation -10 to +60 °C. Max. 80% relative humidity, no condensation.
- The surface temperature of the burner's components may exceed 60 °C.
- Handle with caution – the burner has moving parts, and there is risk of crushing injuries.
- Seal inspections must be performed during installation and servicing to prevent leakage.
- Fitting and installation work has been completed and approved.
- Electrical installation has been correctly performed.
- Flue gas ducts and combustion air ducts are not blocked.
- All actuators and control and safety devices are in working order and correctly set.
- If the boiler is equipped with an access hatch, this must be equipped with a hatch opening switch connected to the burner's safety system.
- When in operation, the burner's noise level can exceed 85 dBA – use hearing protection!

- operation:

- Carry out all stipulated settings, service and inspection work within the set time.

1.3 What to do if you smell gas

- Turn off the fuel supply.
- Turn off the device and remove the boiler from operation.
- Open windows and doors.
- Prevent open flames or sparking, e.g. do not turn lights on or off, do not use any electrical appliances or mobile phones.
- Evacuate the building.
- Notify the installer or gas supplier of the problem so that it can be rectified.



2. Technical data

The burner is intended for:

- Operation in installations according to EN 303 and EN 676.

Fuels:

- Natural gas H, E, L, LL.
- LPG, Butane and Propane.

2.1 Dimensions BG 450-2

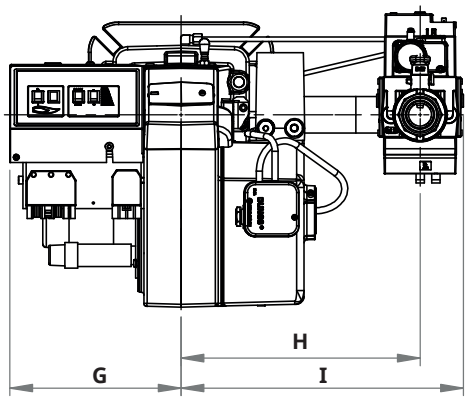

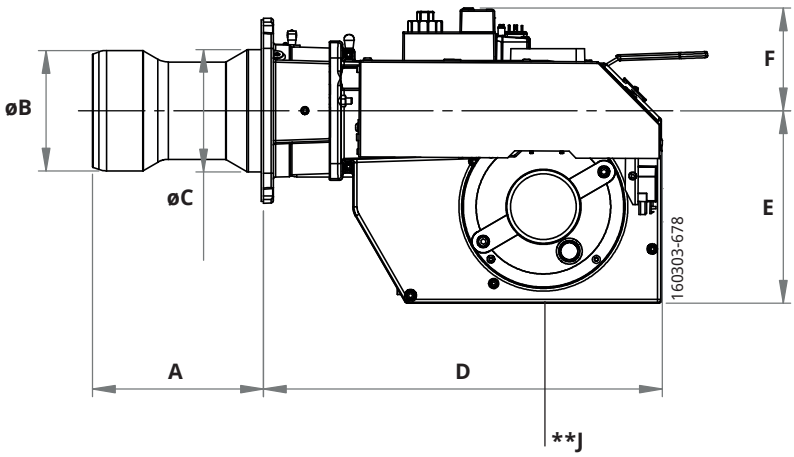

Length of flame tube	Flame tube measure A	Flame tube measure B	Flame tube measure C
256	226	ø159	ø162
356	326	ø159	ø162
456	426	ø159	ø162

D	E	*F	G	H	*I	**J
528	225	330	227	316	500	200

* The above dimensions are max. measurements. Depending on the components used, the measurements may vary.

** Min. recommended distance to floor.

2.1.1 Measurements for connection to the boiler

K	L	M
14	(Ø 210) Ø 255-290	ø170

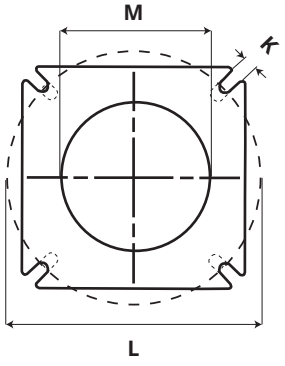

2.2 Capacity range

Capacity kW		Gas quantity at min. power Nm³/h	Gas quantity at max. power Nm³/h	Max. connection pressure mbar	Min connection pressure mbar
BG 450-2					
G20	120 - 500	12.7	52.9	360	See data plate.
G25	120 - 430	14.8	52.9	360	
G30	120 - 550	3.7	17.1	360	
G31	120 - 550	4.9	22.5	360	

160303-790

Gas quantity and capacity vary according to grade of gas and connection pressure.

2.3 Gas categories, approved gases

Only dry gas is permitted for use.

Category	Country of destination	Supply pressure
II_{2R3R}	AT, BE, BG, CH, CY, CZ, DE, DK, EE, ES, FI, FR, GB, GR, HR, HU, IE, IS, IT, LT, LU, LV, MK, MT, NL, NO, PL, PT, RO, RS, SE, SI, SK, TR	20 mbar
$II_{2H3B/P}$	AT, CH, CY, DK, FI, LT, RO, SE, SK	20 mbar
II_{2H3P}	GB, IE	20 mbar
$II_{2L3B/P}$	RO	20 mbar
$II_{2E3B/P}$	PL	20 mbar
$I_{2E(R)B}$	BE	20 mbar
I_{3P}	BE	20 mbar
$II_{2EK3B/P}$	NL	20 mbar

160302-239-4

2.4 Technical specification

	BG 450-2
Main supply	230V, 1~, 4.6A, 50Hz, IP20
Max fuse rating, Operation	6.3A
Max fuse rating, Motor	10A
NO_X-class	3
Sound power (dBA) L_{WA}	89dBA

Measurements according to EN 15036-1:2006

Alt.1 The noise level of the burner can be reduced by equipping the burner with silencer. Installation must be done so it does not prevent air supply to the burner.

Alt.2 The burner's noise level can be reduced by connecting the burner's air intake to the air duct that opens into an appropriate location. Installation must be done so it does not prevent air supply to the burner.

2.5 Working field

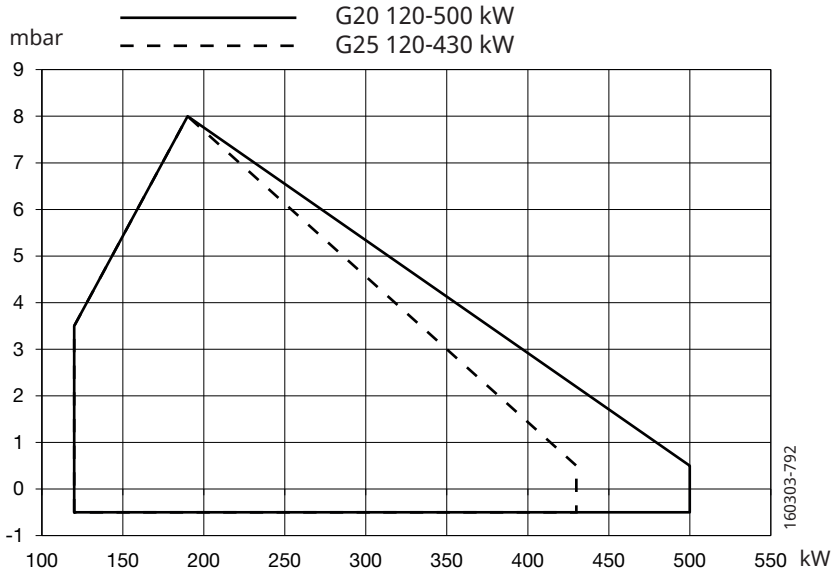

! Do not exceed working field.

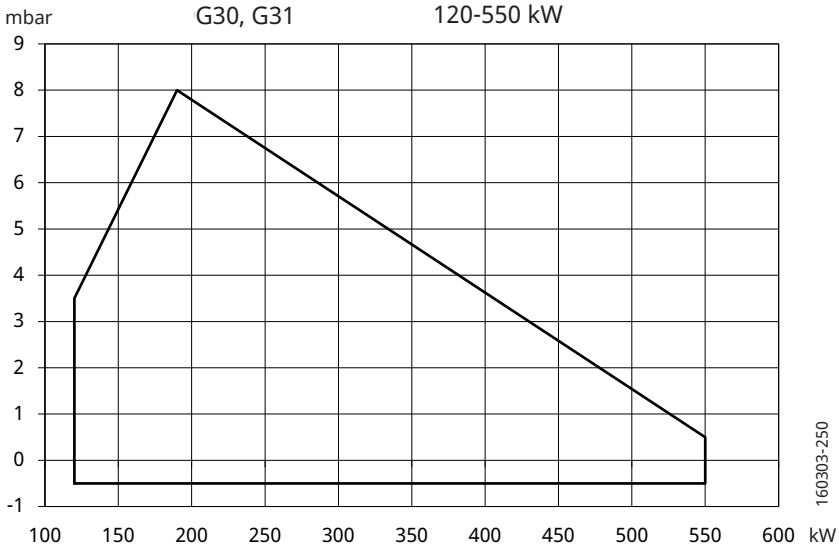

2.6 Components

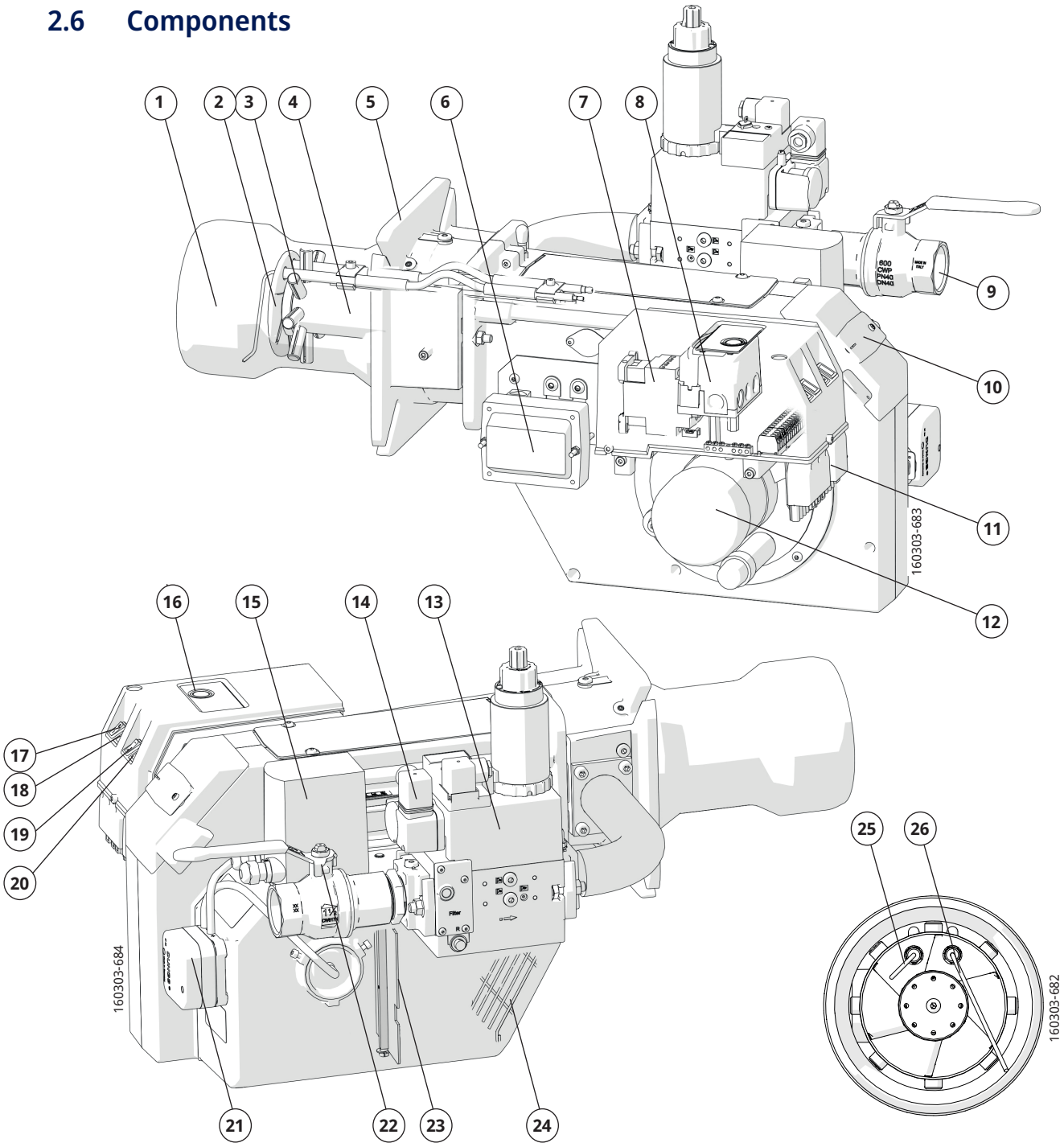

1. Flame tube
2. Brake plate
3. Nozzle
4. Nozzle assembly
5. Fixing flange
6. Transformer
7. Contactor
8. Burner control
9. Connection, gas
10. Cover, inspection glass
11. Electrical connection
12. Motor
13. Gas valve (MultiBloc)
14. Gas pressure switch, min
15. Damper motor
16. Reset button
17. Switch 0-I
18. Indication lamp, Stage I
19. Switch I-II
20. Indication lamp, Stage II
21. Air pressure switch
22. Ball valve
23. Air damper
24. Air intake
25. Ignition electrode
26. Ionization electrode

2.7 Skeleton diagrams

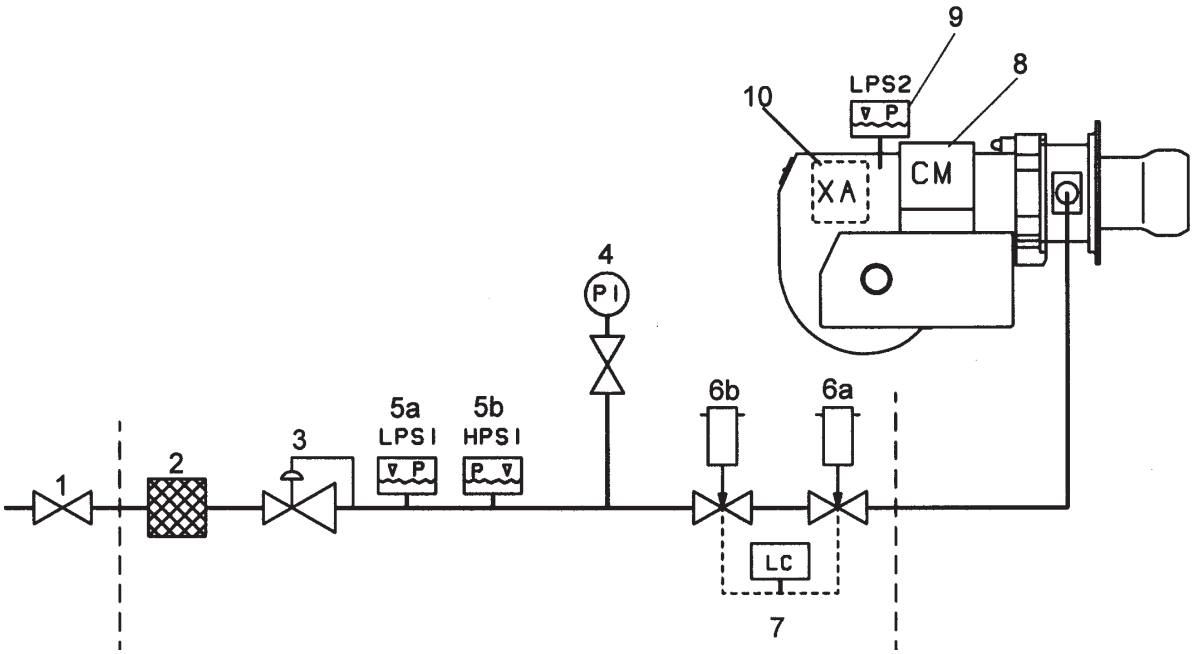

1. Ball valve
2. Filter
3. Pressure regulator
4. Pressure gauge with shut-off cock

5a. Gas pressure switch, min

5b. Gas pressure switch, max

6a. Main valve, 2 -stage. In modulaing operation, this valve is equipped with controls for variable opening.

6b. Safety valve

7. [1)] Leakage control

9. Air pressure switch

10. Burner control

Pos. 5b, 7: Components not required according to EN 676.

[1)] Required over 1200 kW according to EN 676.

3. Electric equipment

3.1 Safety system

The safety system (safety switch for hatches, doors, water level, pressure, temperature and other safety devices) must be installed in the safety circuit in accordance with current regulations for the system.

The cables of the safety system must be separated so that the outgoing signal is not placed in the same cable as the incoming signal.

3.2 Wiring diagram

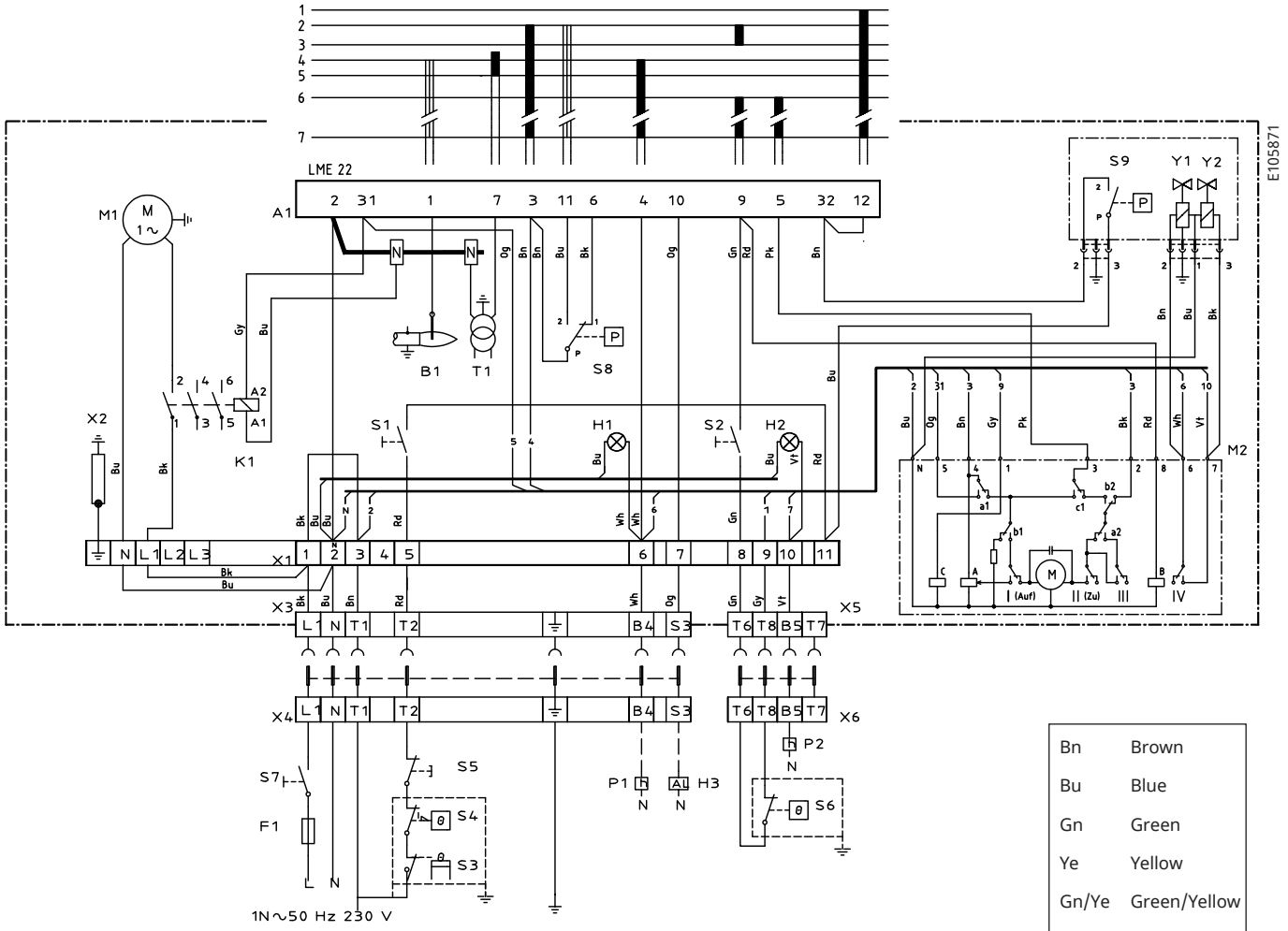

Bn	Brown
Bu	Blue
Gn	Green
Ye	Yellow
Gn/Ye	Green/Yellow
Bk	Black
Gy	Grey
Rd	Red
Wh	White
Og	Orange
Vt	Violet

172 615 15-2

3.2.1 Components

A1	Burner control	P2	Time counter, High capacity	T1	Ignition transformer
B1	Ionization electrode	S1	Operating switch	X1	Connection terminal board
F1	Operating fuse	S2	Operating switch, Stage 2	X2	Earth terminal
H1	Lamp, Low capacity	S3	Control thermostat	X3	Plug-in contact, burner
H2	Lamp, High capacity	S4	Temperature limiter	X4	Plug-in contact, boiler
H3	Alarm signal 230V	S5	Safetyswitch for hinged door	X5	Plug-in contact, stage 2, burner
K1	Contactor	S6	Control thermostat, Stage 2	X6	Plug-in contact, stage 2, boiler
M1	Motor	S7	Main switch	Y1	Solenoid valve 1
M2	Damper motor	S8	Air pressure switch	Y2	Solenoid valve 2
P1	Time counter, Total operating time	S9	Gas pressure switch, min		

3.3 Function

1. **Operating switch ON-Thermostat ON-Gas pressure switch ON-Air damper closed.**
   Check that the air pressure switch does not indicate fan pressure, then the motor starts.
2. **Damper motor opens.**
   The damper motor opens the damper to the maximum load position. Check that the air pressure switch indicates sufficient fan pressure.
3. **Damper motor closes.**
   The damper motor closes to the minimum load position, then the ignition spark is produced.
4. **Main and safety valves open.**
   The gas ignites and the ionisation electrode indicates flame.
5. **The safety time ends.**
   Ignition spark and safety time cease. If the spark is missing or it disappears after this time limit, the gas burner control is blocked.
6. **Operating position.**
   The burner is in operating mode and can now switch to the capacity controlled by the controller.
7. **Stop.**
   The burner operation can be stopped with the operating switch or the thermostat.

! Mains connection and fuse in accordance with local regulations.

If the gas burner control is blocked

The red light in the gas burner control comes on. The burner is restarted by pressing the reset button.

3.2.2 Technical data

	LME22.232C2E
Preignition time	3 s
Prepurge time	20 s
Postignition time	2.5 s
Safety lockout time	< 3 s
Reset time after lockout	< 1 s
Reaction time on flame failure	< 1 s
Min. ionisation current at flame	5 µA
Max. ionisation current	20 µA

160303-325

3.4 Control program at faults; fault mode indicator LME ....

3.4.1 Colour codes

Table colour codes for multi-coloured signal light (LED)		
Status	**Colour codes**	**Colours**
Waiting period «tw», other waiting periods	○……	Off
Ignition phase, ignition controlled	●○●○●○●○●○●	Blinking yellow
Normal operation	□……	Green
Operation, poor flame signal	□○□○□○□○□○	Blinking green
Illegal flame signal during start-up	□▲□▲□▲□▲□▲	Green-Red
Undervoltage	●▲●▲●▲●▲●▲	Yellow-Red
Fault, alarm	▲……	Red
Blinking code for fault codes	▲○ ▲○ ▲○ ▲○	Blinking red
Interface diagnostics	▲▲▲▲▲▲▲▲	Red flicking

……	Continuous
○	Off
▲	Red
●	Yellow
□	Green

3.4.2 Diagnosting alarm causes

After alarm disconnection, the red alarm signal light is lit continuously.

The diagnosing of the alarm cause can be read according to the following sequence:

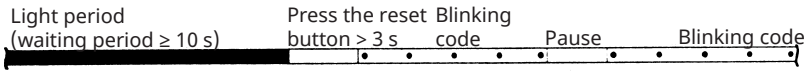

3.4.3 Limiting of starting repetitions

LME 11... has a function with start repetition if the flame is not created at start or disappears during operation.. LME 11... allows max. three repetitions during continuous starting cycle.

3.4.5 Alarm code table

Red blinking code on signal lamp (LED)	Possible causes
Blinking 2 x ••	No flame creation at End of “TSA” – defective or fouled flame monitoring. – defective or fouled fuel valves. – poor burner setting. – defective firing device.
Blinking 3 x •••	“LP” defective – No air pressure switch signal after “t10”. – “LP” is welded in open position.
Blinking 4 x ••••	Illegal flame signal during start-up.
Blinking 5 x •••••	Time out “LP” – “LP” is welded in open position.
Blinking 6 x ••••••	Free
Blinking 7 x •••••••	Too many flame disappearances during operation. – poor burner setting. – defective or fouled fuel valves. – defective or fouled flame monitoring.
Blinking 8 x ••••••••	Free
Blinking 9 x •••••••••	Free
Blinking 10 x ••••••••••	Connection fault or internal fault, outgoing contacts or other faults.
Blinking 14 x ••••••••••••••	CPI contact not closed.

During the diagnosing of the alarm cause, the control outputs are voltage-free.

- The burner is disconnected.
- Exception, alarm signal «AL» at board 10.
- Reconnection of the burner happens after resetting only.
- Press the reset button 0.5...3 s.

3.4.4 Interface diagnostics

To change to interface mode, press and hold the reset button longer than 3 s. To go back to the normal position, press and hold the reset button longer than 3 s. If the gas burner control is in the alarm position, it is reset by pressing the reset button 0.5...3 s.

4. Installation

4.1 General instructions

Installation must be carried out in accordance with current regulations and instructions.

The supplier/installer of the facility is obliged to familiarize himself with all regulations so that the installation meets the requirements of the local authorities.

Installation, assembly and settings must be performed to obtain the best possible function. Only gas intended for the gas burner may be used.

4.2 Instructions

It is the installer's responsibility to instruct the user in detail in the functions of the gas burner and the entire system.

4.3 Inspection and maintenance

The system must be maintained at the interval specified in the service schedule. If the burner is in a dirty environment, service should be done at more frequent intervals.

4.4 Preparation for assembly

Check that the burner's dimensions and capacity range match the current boiler. The power information on the type plate refers to the burner model's min. and max. effect.

4.5 Gas supply

In order to obtain good operational safety, it is important that the installation of the gas distribution system is carried out correctly, considering the following:

- Check that the burner is approved for the gas quality of the installation.
- Check that the burner gas components are approved for the specified gas pressure, see type plate.
- Installation must be carried out in accordance with current standards.
- Pipe lines should be assembled so that service can easily be performed on the boiler and burner.
- Pipe lines should be assembled so that any contaminants do not come into contact with the gas components.

4.6 Electric connection

- Before work on the electrical connection, the current must be disconnected so that the installation is isolated.
- Connection must be done in accordance with the applicable regulations.
- Connection must conform to the wiring diagram.

! **If any electrical connection other than that recommended by CTC is used, there is a risk of property damage and personal injury.**

172 535 09-3

4.7 Handling and lifting instruction

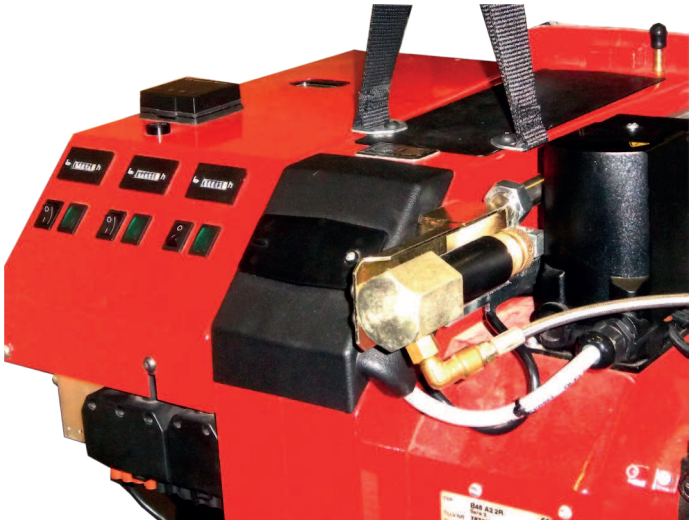



The lifting aid are available as accessories.



5. Mounting

Mount the burner to the boiler using 4 bolts (if new fixing holes need to be drilled, use the fixing flange as a template).

Separate the fixing flange from the fan housing as follows:

1. Remove cover of fan housing (A), disconnect ignition and ionizing cables and the control arm (B) from nozzle assembly.
2. Disconnect the electrical cable to the gas valve.
3. Loosen nuts on both sides of the fixing flange.
4. Loosen end stop (C) for guides.
5. Pull the fixing flange with flame tube, nozzle assembly and gas fitting out of the fan housing.
6. Check that the ignition electrodes are correctly set, see chapter Gas nozzle.
7. Fit the enclosed gasket to the flame tube.
8. Screw the fixing flange and the enclosed gasket onto the boiler, lift the fan housing onto the guides and mount in reverse order.
9. Connect the gas line, connect the supply cable, operating and safety circuits.

Before obtaining access to electrical and fuel line components all supply circuits must be disconnected.

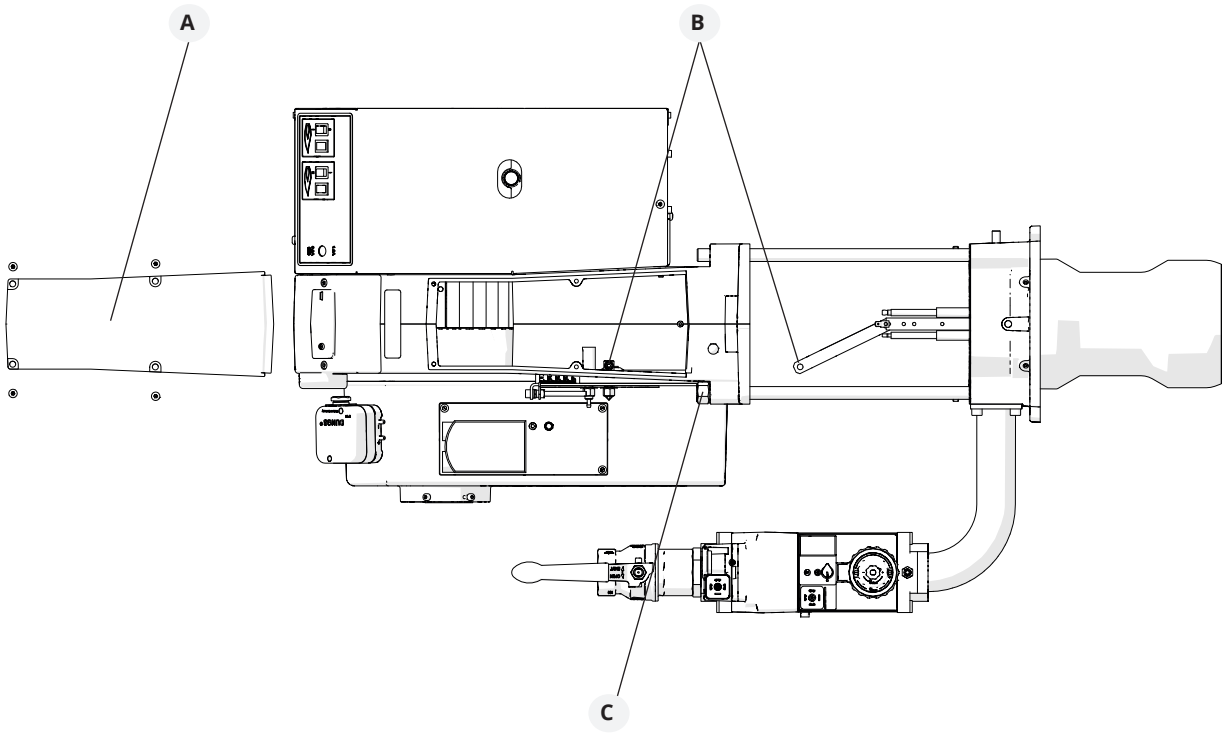

5.1 Gas nozzle

Check that the ignition electrodes are correctly set before mounting on the boiler.

Natural gas

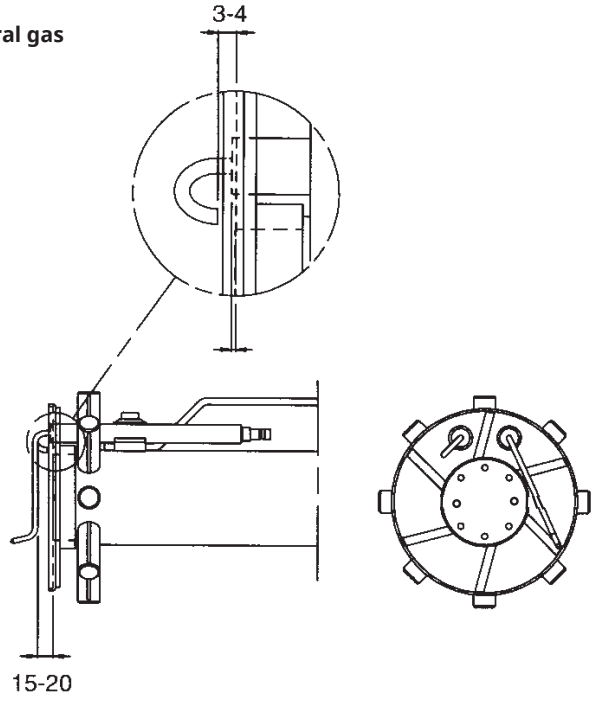

Propane

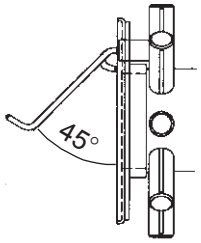

Biogas (UV detector)

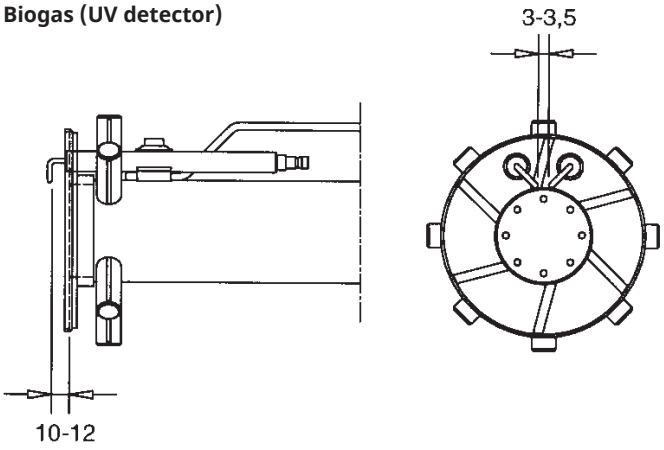

5.2 De-aerating

De-aerating the gas line by closing the tap to the gas connection and unscrewing the screw on the measuring nipple for the connection pressure. Connect a plastic hose, open the tap and drain the gas in a safe place. When the de-aerating is completed, be sure to refit the screw on the measuring nipple.

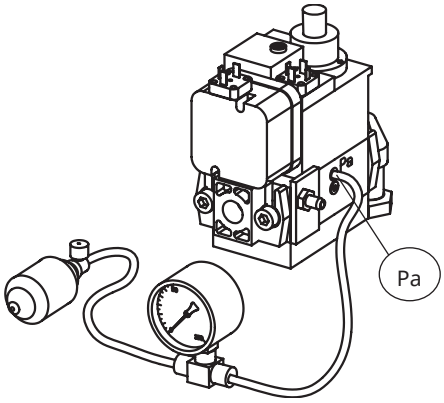

5.3 Leakage control

When checking for leakage, the solenoid valve must be closed. A pressure gauge is connected to the measuring nipple ”Pa”, see picture. The test pressure in the system must not be higher than max. connection pressure, see data plate. Also check the tightness at the filter. If leaks are found during measurement, locate the source using soapy water or leak detection spray. After sealing: check the leakage of the gas fixture again.

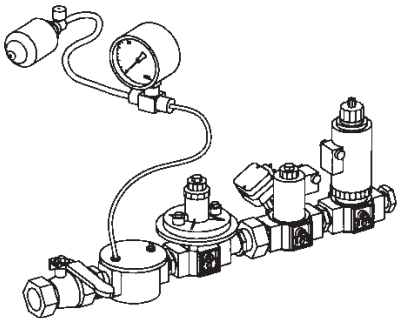

! Check for leaks in the gas line.

5.4 Calculation of gas flow

Formula symbol	Description	Example values
V_N	Standard gas volume [Nm3/h] Gas volume at normal condition 15 °C 1013 mbar	-
Q	Boiler output [kW]	380 kW
H_i	Lower calorific value of gas [kWh/m³] Natural gas under normal conditions 15 °C 1013 mbar, EN 676	9.45 kWh/m³
η	Boiler efficiency (e. g. 90%)	0.9
f	Conversion factor (pressure and temperature compensation)	-
t_{Gas}	Gas temperature at gas meter [°C]	15 °C
P_{Baro}	Barometric air pressure [mbar]	945 mbar
P_{Gas}	Pressure of gas at the gas meter [mbar]	20 mbar
V	Operating volume [m³/h]	-
VG	Gas flow measured at the gas meter [m³]	1.28 m³
T	Measuring time for consumed gas quantity [s]	93 s

Calculate standard volume using the following formula:

$$V_N = \frac{Q}{\eta \cdot H_i} \qquad V_N = \frac{380\ kW}{0.9 \cdot 9.45\ kW/m^3} = 44.7\ m^3/h$$

Calculate conversion factor using the following formula:

$$f = \frac{273}{273 + t_{Gas}} \times \frac{P_{Baro} + P_{Gas}}{1013} \qquad f = \frac{273}{273 + 15} \cdot \frac{945 + 20}{1013} = 0.90$$

Calculate gas volume using the following formula:

$$V = \frac{V_N}{f} \qquad V = \frac{44.7\ m^3/h}{0.90} = 49.5\ m^3/h$$

Determine operating volume with the following formula:

$$V = \frac{3600 \cdot V_G}{T} \qquad V = \frac{3600 \cdot 1.28\ m^3}{93\ sek} = 49.5\ m^3/h$$

Height above sea level [m]	0	100	200	300	400	500	600	700	800	900	1000	1100	1200
P_{Baro} [mbar]	1013	1001	989	977	966	954	943	932	921	910	899	888	877

Calorific value of the gas

Gas quality		kWh/Nm³	MJ/Nm³
Natural gas	G20	9.5	34.02
Natural gas	G25	8.2	29.25

Gas quality		kWh/Nm³	MJ/Nm³
Butan	G30	32.25	116.09
Propan	G31	24.44	88.00
Biogas		6.0	21.60

Lower calorific value H_i at normal conditions 15 °C and 1013 mbar, EN 676.
For exact calorific value of the gas, contact the gas distributor.

172 535 72-1

6. Settings

6.1 Setting the combustion assembly

The burner is equipped with a lever that changes the position of the brake plate in the combustion head. This is used to set the correct pressure drop across the combustion assembly and thereby obtain good combustion without ripples.
Make the adjustment by turning screw X.

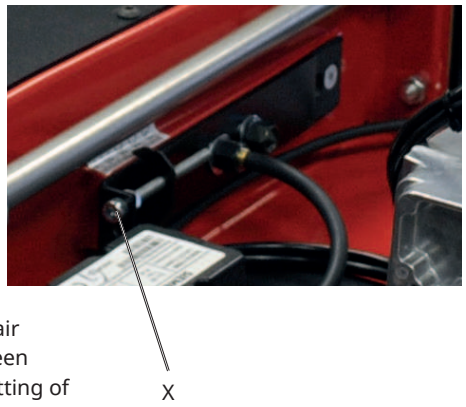

The best position is, among other things, dependent on the input power and overpressure in the boiler.

A general rule of thumb is that the smaller the capacity, the smaller the gap should be between the brake plate and the combustion assembly.

The position of the brake plate also has an impact on the quantity of air supplied for combustion. This means that once the brake plate has been adjusted, the combustion should be checked and, if necessary, the setting of the air damper adjusted to obtain good combustion.

A left turn opens the brake plate, providing a lower pressure drop and more air to the combustion process.

A right turn closes the brake plate, providing a higher pressure drop and less air to the combustion process.

6.2 Startup

After the burner has been mounted on the boiler and the electrical connection, de-aeration and tightness control have been performed, the burner is ready to start-up.

Read the sections dealing with settings of gas valve, damper motor and combustion device before start-up.

Open the ball valve and turn on the main switch, start the burner and begin setting up the system.

6.3 Control of combustion

Check combustion using flue gas analysis instruments. Set the burner to about 20% excess air and check that good combustion is obtained. Check the actual gas flow on the gas meter to ensure that the correct input power is achieved.

6.4 Setting the air pressure switch

The air pressure switch must block the burner if the amount of air for combustion becomes too low. The air pressure switch must be set so that in the event of a lack of air supply at the burner's max. or min. capacity reacts before the monitored pressure drops so much that poor combustion occurs.

1. Remove protective cover.

Be careful when adjusting the air pressure switch; it contains a live component.

2. Start the burner.
3. Carefully turn the scale on the air pressure switch clockwise until the air pressure switch stops the burner.
4. Measure and note the lowest air pressure in the entire work area.
5. Set the air pressure switch to about 10-15% lower than the lowest noted pressure.
6. Test run the burner and check the function in the entire work area.
7. Refit protective cover.

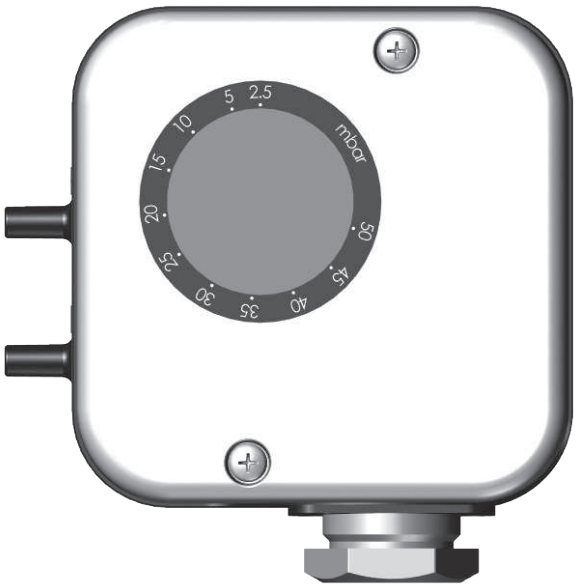

6.5 Setting the gas pressure switch, min.

The gas pressure switch must react to too low a connection pressure to the burner, prevent the burner from starting and stop the burner during operation. The burner may start again when the connection pressure has risen above the set pressure on the gas pressure switch.

1. Remove protective cover.
2. Open measuring socket and connect a manometer for measuring connection pressure.
3. Start the burner.
4. Measure and note the connection pressure to the burner at the highest input power.
5. Set the gas pressure switch to a value 10-15% lower than the noted pressure.
6. Check the setting by carefully closing the ball valve and at the same time measuring the connection pressure.
7. When the gas pressure switch stops the burner, the measured value must approximately correspond to the setting on the gas pressure switch.
8. Open ball valve.
9. Remove manometer and close measuring socket.
10. Refit protective cover.

Check gas tightness.

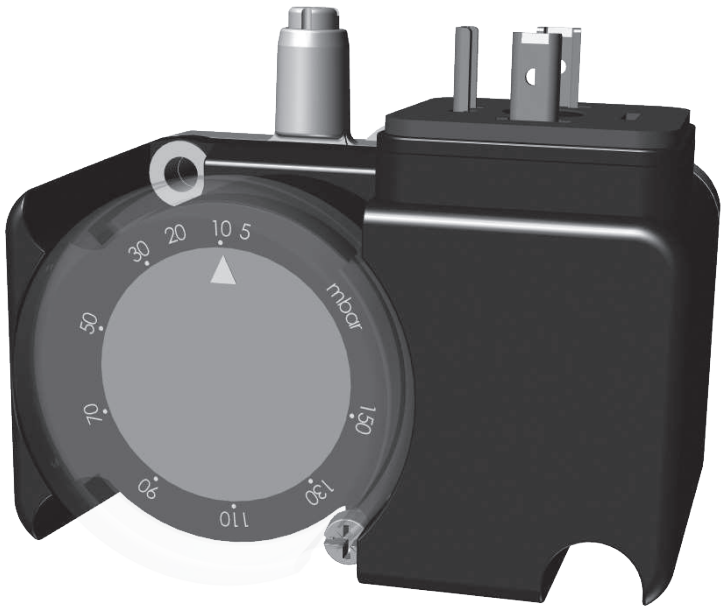

6.6 Settings Damper motor, 2-stage

Air adjustment

The damper motor rotates the air damper between three preset positions: completely closed, low load and high load. These positions are controlled in the motor by colored cam discs, the black cam disc controls the switching on/off of the solenoid valve. Adjust the amount of air by changing the position of the cam discs.

Blue cam disc is the limit position for closed air dampers and does not normally need to be changed.

Low load

- Set control switch for load position to position II (high load).
- Turn orange cam disc to 0° to reduce airflow and to 90° to increase airflow.
- Return the control switch to position I (low load) and check the combustion values.

High load

- Set control switch for load position to position I (low load).
- Turn red cam disc to 0° to reduce airflow and to 90° to increase airflow.
- Place black cam disc in a position between red and orange cam discs and adjust to obtain a good load change.
- Return the control switch to position II (high load) and check the combustion values.

Release

By pressing the button, the motor is disengaged and the air damper can be turned. The function is used when servicing air dampers.

Recommended excess air

Gas quality	Excess air flue gases% O_2
Natural gas	4 ±1
Propane	
Butane	
Liquefied petroleum gas	
Biogas	

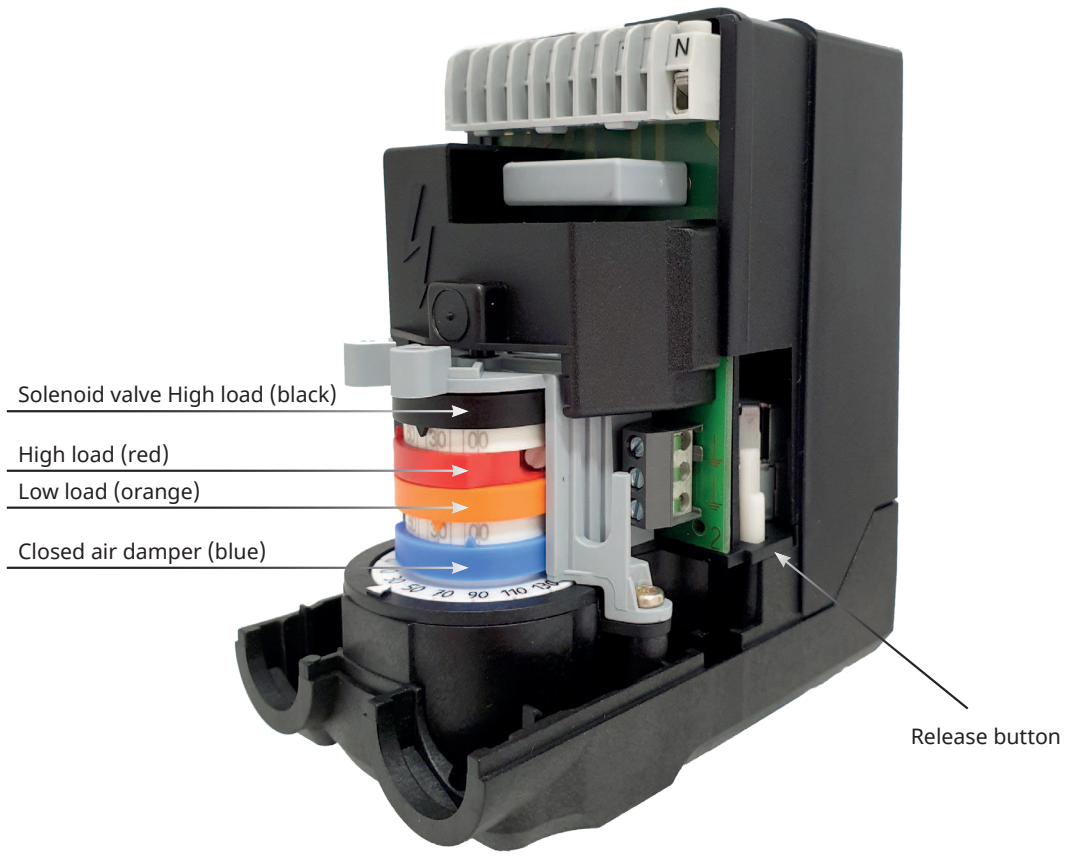

7. Gas valve, MultiBloc ZRDLE 405-420

All gasline components shall be assembled and mounted without bending, torque and outher mechanical or thermal stress.

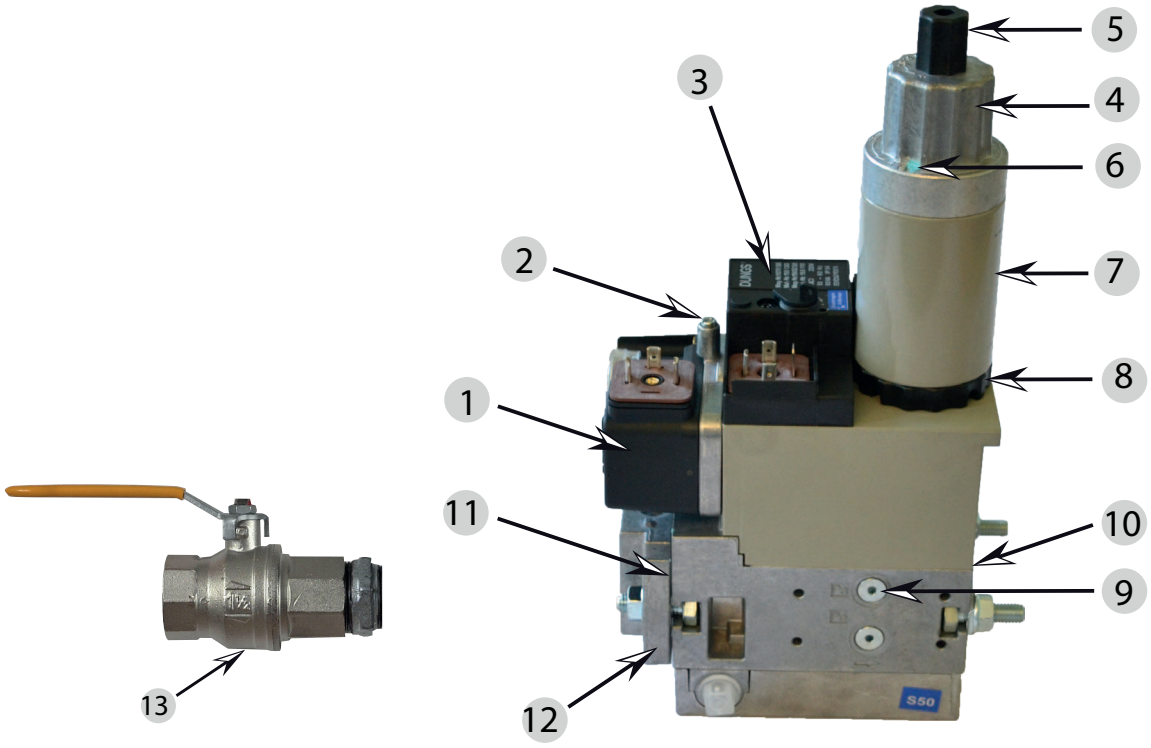

1. Gas pressure switch
2. Inlet pressure
3. Governor with pressure adjustment
4. Hydraulic device, adjustment of stage 2
5. Protective cover, start gas adjustment
6. Lock screw for flow adjustment
7. Main valve
8. Knob for adjustment of stage 1
9. Test nipple, pressure after governor
10. Test nipple for nozzle pressure
11. Filter
12. Fixing flange
13. Ball valve

Max. inlet pressure: 360 mbar.
Adjustable governor pressure:
405 - 412 S50 = 4 - 50 mbar
415 - 420 S20 = 4 - 20 mbar
415 - 420 S50 = 20 - 50 mbar

Solenoid valve: Slow opening valves with adjustable start load, stage 1 and stage 2.

Turn to the left = the start gas flow is increased.

Flow adjustment 2-stage design

For stage 1, loosen the lock screw a. Turn the hydraulic device e:

to the right = the gas flow is reduced

to the left = the gas flow is increased

For stage 2, turn the hydraulic device b:

to the right = the gas flow is reduced

to the left = the gas flow is increased

Do not forget to tighten the lock screw again.

Adjustment of governor

Adjust outlet pressure from governor by means of a screw driver. Min. and max. outlet pressures correspond to appr. 60 turns of the spring. It is not possible to change pressure springs in order to change the outlet pressure.

Turn to the right = the outlet pressure is increased

Turn to the left = the outlet pressure is reduced

Adjustment of start gas flow

Remove the protective cover c.

Turn the adjustment knob d (use the protective cover as a tool) to the desired start gas flow.

Turn to the right = the start gas flow is reduced

Turn to the left = the start gas flow is increased

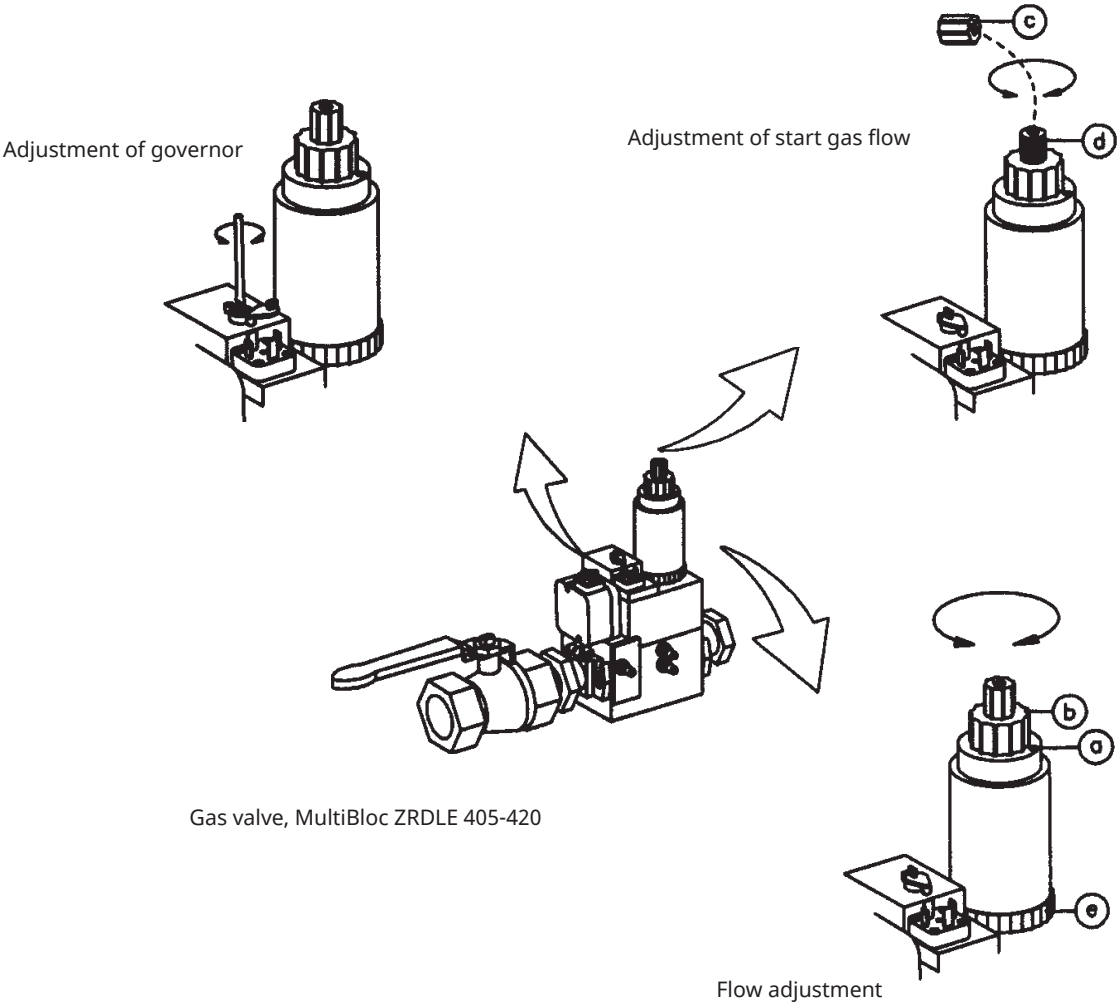

Gas valve, MultiBloc ZRDLE 405-420

Flow adjustment

7.6.1 Pressure taps

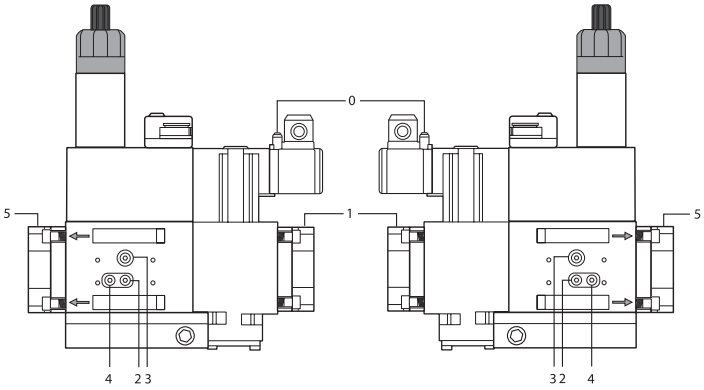

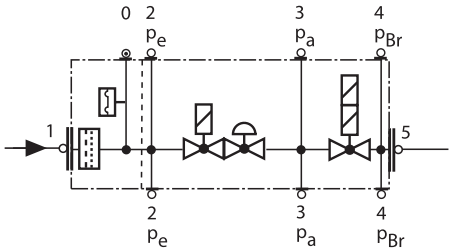

1,2,3,4,5 1/8 screwed sealing plug

7.6.2 Electrical connection

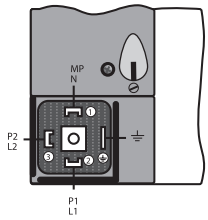

S 20/S 50

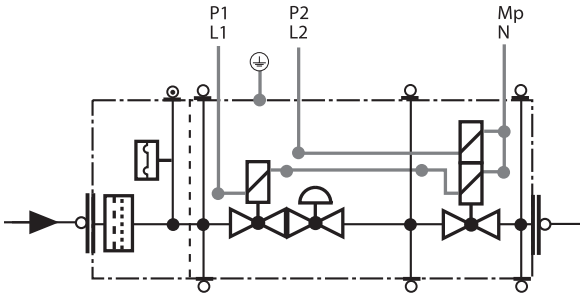

8. Service

Service and maintenance work may only be performed by qualified personnel. Perform operational check of all safety systems and components at each service. Only CTC original parts should be used when replacing components.

! Use caution when operating the burner, surfaces may be hot.



8.1 Burner Service Schedule, Gas

Servicing must be carried out once a year or after 3,000 hours of operation.

Burner	1 year	3,000 h
Inspection of electrical installation	1 year	3,000 h
Leak check	1 year	3,000 h
Filter	1 year, replacement at Δp>10 mbar	3,000 h, replacement at Δp>10 mbar
Electrodes	Replacement/cleaning 1 year	Replacement/ceaning 3,000 h
Brake plate	Replacement/cleaning 1 year	Replacement/ceaning 3,000 h
Motor	1 year	3,000 h
Fan wheel	1 Year Replace if need for cleaning/imbalance	3,000 h Replace if need for cleaning/imbalance

8.2 Component replacement intervals

Components	**Service life – Recommended replacement**	**Service life – Recommended replacement Operating cycles**
Control system	10 years	250,000 starts
Valve control system	10 years	250,000 starts
Pressure switch	10 years	250,000 starts
Ignition system with flame guard	10 years	250,000 starts
UV flame sensor	10,000 h	N/A
Gas pressure controls	15 years	N/A
Gas valve without leak testing	10 years	250,000 starts
Gas valve with leak testing	Replacement upon fault detection	N/A
Gas pressure switch	10 years	250,000 starts
Safety blow-off system	10 years	N/A
Damper motor	N/A	500,000 starts
Contactor	10 years	500,000 starts



The burner and its components must be recycled according to applicable regulations.

172 615 88-3

8.3 Combustion device

1. Disconnect the main power and shut off the fuel supply.

Before obtaining access to electrical and fuel line components all supply circuits must be disconnected.

2. Remove cover (A), disconnect ignition and ionization cables and control arm (B) from nozzle assembly.
3. Loosen nut (C) and pull out the fan housing on the guides.
4. By loosening screw(s) (D), the combustion deviceis released and can be lifted out from the burner.
5. Check and clean the brake plate and gas inlet, replacing components as necessary.
6. Check that the ignition and ionisation electrodes are correctly set, (see Gas nozzle chapter) - replace if necessary.
7. Refit the combustion device in reverse order.
8. Press the burner together and lock with nut (C).
9. Switch on the main power and open the fuel supply.
10. Start burner and check/adjust combustion.

Check for leaks in the gas line.

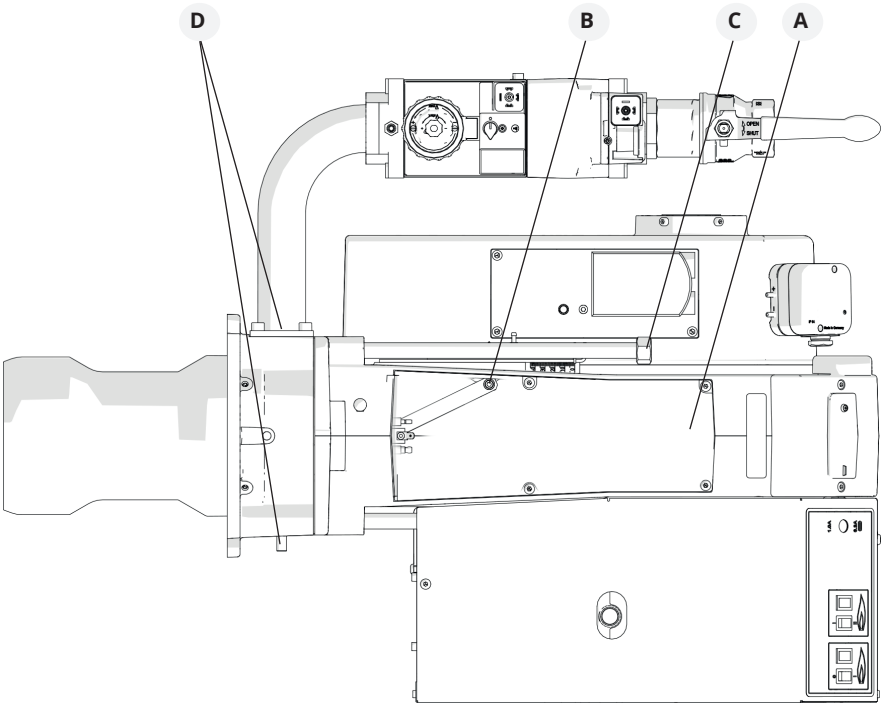

When servicing/replacing components that affect combustion, flue gas analysis and soot test must be carried out following installation.

8.4 Air damper

1. Disconnect the main power and shut off the fuel supply.

Before obtaining access to electrical and fuel line components all supply circuits must be disconnected.

2. Remove cover (A), disconnect ignition and ionization cables and control arm (B) from nozzle assembly.
3. Loosen nut (C) and pull out the fan housing on the guides.
4. Remove the intake grille (E) to the air intake.
5. Loosen screws (F) holding the damper motor fixing plate and lift the damper motor out.
6. Clean the air damper and air intake, lubricate the damper shaft if necessary.
7. Refit the damper motor and mounting plate, ensuring that the damper shaft and control arm are correctly connected.
8. Fit the intake grille.
9. Press the burner together and lock with nut (C).
10. Switch on the main power and open the fuel supply.
11. Start burner and check/adjust combustion.

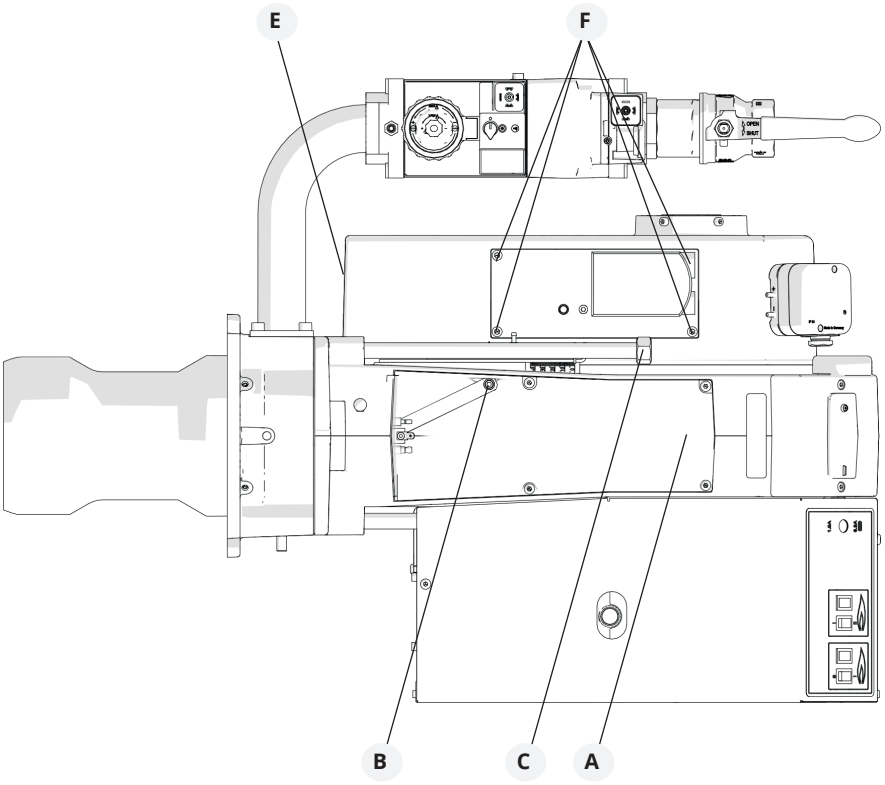

8.5 Replacement, Damper motor air

1. Disconnect the main power and shut off the fuel supply.

> **!** **Before obtaining access to electrical and fuel line components all supply circuits must be disconnected.**

2. Note the connection position of cables to the damper motor.
3. Disconnect cables from damper motor.
4. Loosen screws (G) to the damper motor fixing plate.
5. Disengage the damper motor and turn it to approx. 70°.
6. Lift up damper motor.
7. Remove the control arm (H) from the motor shaft.
8. Loosen screws (I) securing the damper motor to the fixing plate. Adjust the cams of the new damper motor according to the replaced motor, see chapter “Setting Damper motor” and fit the fixing plate.
9. Fit the control arm on the shaft of the damper motor. It is important that the screw is perpendicular to the flat surface of the shaft.
10. Refit the damper motor and mounting plate, ensuring that the damper shaft and control arm are correctly connected.
11. Connect the damper motor cable.
12. Switch on the main power and open the fuel supply.
13. Start burner and check/adjust combustion.



Releasing button

By pressing the button and snapping it down, the motor will be released and the damper can easily be turned. This function facilitates an exchange of damper motor.

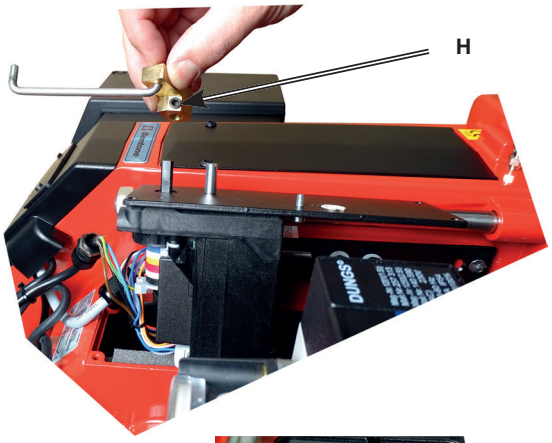

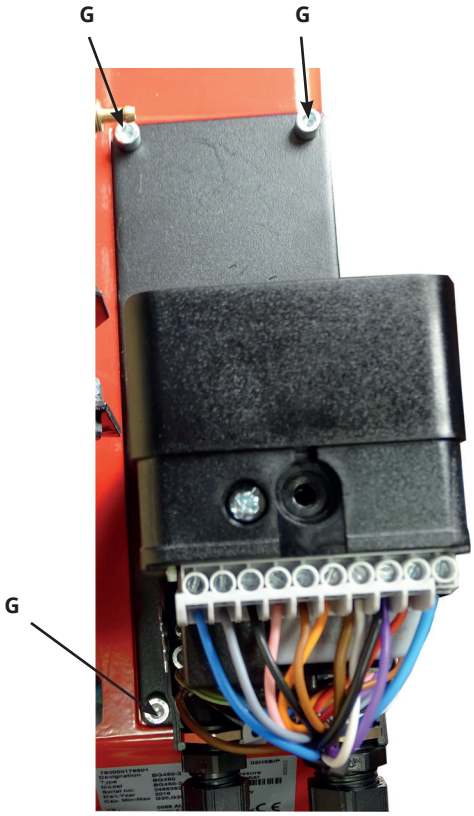

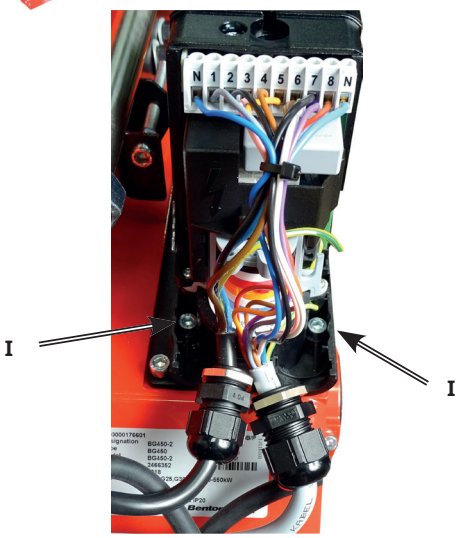

8.6 Fan

1. Disconnect the main power and shut off the fuel supply.

Before obtaining access to electrical and fuel line components all supply circuits must be disconnected.

2. Detach the electrical panel (Y).
3. Loosen the motor electrical connection and screws (X) enough to turn and lift out the motor.
4. Check the fan wheel attachment and any skew, replace if damaged.
5. Clean or replace the fan wheel.
6. Refit the parts.
7. Switch on the main power and open the fuel supply.
8. Start burner and check/adjust combustion.

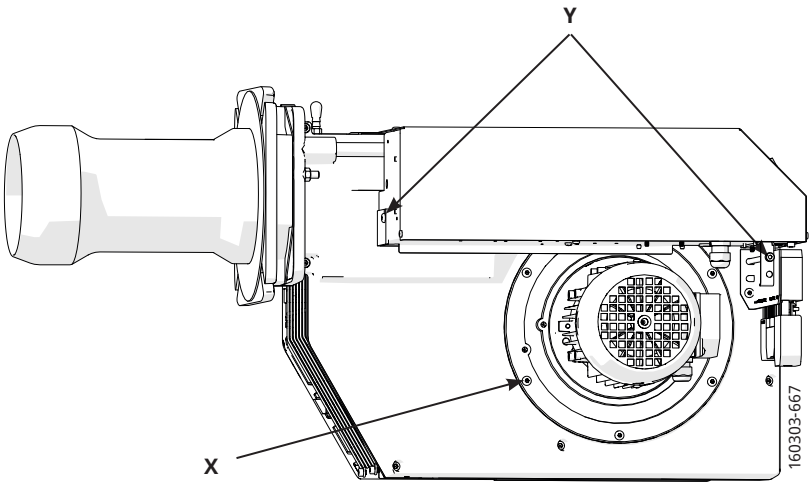

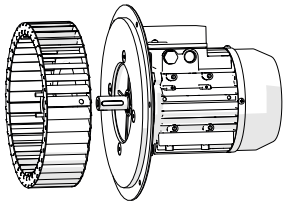

When servicing/replacing components that affect combustion, flue gas analysis and soot test must be carried out following installation.

8.7 Vibrations

Maximum permitted vibration level is 5.0 mm/s.

- Check tightness of fasteners.
- Check fan wheel for damage and contamination (replace if necessary).
- Check motor shaft and bearings. If they are worn, replace the motor.

Use screw to attach the vibration sensor.



8.8 Control of flame monitoring and ionization current

The burner is monitored in the standard version according to the ionization principle. The ionization current must be checked at each service occasion.

The ionization current is measured with a microampermeter (µA) which is connected in series with the flame electrode and the gas burner control. Connect the µA meter as shown below. The minimum required ionization current is shown in the table. During normal operation, this current must be significantly higher, preferably more than 10 µA.

The reason for too low ionization current can be creep current, poor connection to earth, dirt or that the flame electrode may need to be adjusted. The wrong gas/air mix can also cause too low ionization current.

Technical data	
Idle voltage at ION-terminals	AC 115-230V
Short-circuit current	Max. AC 100-300 mA
Min. current for flame detection	Min. DC 1.5 µA
Required current to ensure detection	Min. DC 3 µA
Possible detection current	Max. DC 20 µA
Operational indicator lamp flashes green	<5 µA DC
Operational indicator lamp shines green	>5 µA DC

8.8.1 Flame monitoring ionisation

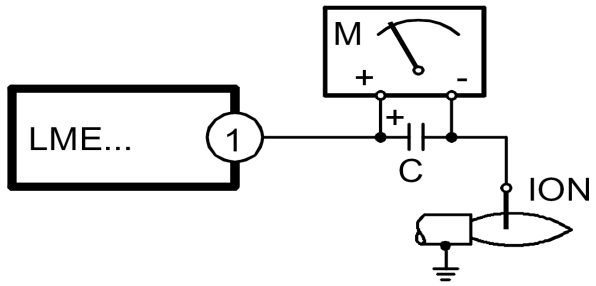

8.8.2 UV –detector (QRC)

The UV sensor should not be exposed to temperatures higher than 60 °C. The current passing through the UV sensor when it is lighted must be at least 70 µA. The current can be measured using a rotary coil instrument. A check is necessary only if a malfunction is suspected.

8.8.3 Flame monitoring UV-detector (QRC)

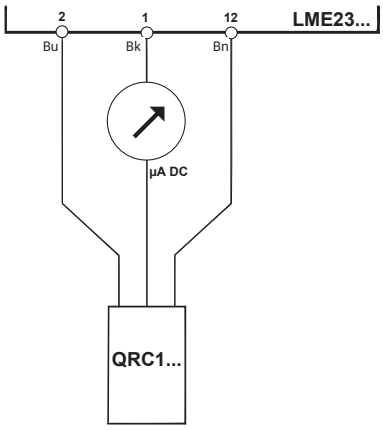

Technical data	
Idle voltage at ION-terminals	AC 115-230V
Short-circuit current	Max. AC 100-300 mA
Max. current for flame detection	Max. DC 5.5 µA
Required current to ensure detection	Min. DC 40 µA
Possible detection current	Max. DC 60 µA
Operational indicator lamp flashes green	<45 µA DC
Operational indicator lamp shines green	>45 µA DC

8.9 Replacement of electrical components

1. Disconnect the main power and switch off the fuel supply.

Before obtaining access to terminals, all supply circuits must be disconnected.

2. Note the connection of the existing component and disassemble.
3. Fit new component with same connection or with specified alternative connection.
4. Switch on the main power and check the operation of the new component.
5. Start burner and check/adjust combustion.

When servicing/replacing components that affect combustion, flue gas analysis and soot test must be carried out following installation.

9. Handing over of the installation

- Make repeated start attempts to ensure that the adjustments function.
- Close the ball valve during operation to check that the gas switch switches off at the set value.
- Remove the hose for the air pressure switch to check that the burner locks out.
- Check that all protective covers and measurement nipples are mounted and fastened.
- Fill out necessary test reports.
- Instruct the persons in charge of the operation on the service and maintenance of the installation and what to do should any troubles occur.
- Inspection and service must be carried out by authorized personnel.

Review and service should be performed by authorised personnel only.

10. Troubleshooting

Conditions favourable to trouble-free operation of the system can only be guaranteed through the interaction between three factors: electricity, gas flow and combustion air. If any of these factors change, it may cause a malfunction.

Before requesting servicing, check the following points:

1. Are the system's gas taps open?
2. Are the fuses intact and is the power on?
3. Are control devices (room thermostat, boiler thermostat, etc.) correctly set?
4. Is there sufficient gas pressure to the burner?
5. Are the burner controls on standby and not locked?
6. Is there sufficient air supply to the burner?

Cause of fault	Action
Burner does not start:	
No gas.	Make sure all gas taps are open.
No power.	Check the fuse, thermostat and electrical connections.
Burner motor does not start.	Motor protection has tripped. Motor faulty.
Burner control faulty.	Replace.

Burner motor running, no ignition spark at the end of pre-aeration:	
No power in the terminals.	Check the connector. Replace faulty burner controls.
Ignition electrodes in contact with each other or earth.	Adjust.
Ignition electrode porcelain damaged.	Replace the electrodes.
Poor connection to cable connectors.	Adjust connection.
Ignition cables damaged.	Replace.
Transformer damaged, no power to secondary winding.	Replace the transformer.
Ignition cable and ionisation cable swapped around.	Reconnect.

No flame propagation:	
Gas solenoid valve faulty.	Replace.
Gas solenoid valve does not open despite having power.	Replace solenoid valve terminals, or entire valve.
No power to solenoid valve.	Check the connection.
No electrical connection through air pressure gauge.	Check the air pressure gauge's settings and functions.
Ignition load incorrectly set.	Increase/decrease gas supply Reduce airflow.
Burner control faulty	Replace
Air pressure gauge incorrectly set or faulty	Check the settings and reset, or replace
No acknowledgement signal due to incorrect adjustment or misalignment of the control motor cams.	Check the settings and realign.

Burner trips after safety time limit despite flame propagation:	
No ionisation current or UV cell incorrectly positioned.	Adjust ionisation electrode and UV cell Check cables and connectors.
Burner control monitor faulty.	Replace burner control.
Voltage lower than 185V.	Contact an electrician.
Ignition electrodes disrupting ionisation current.	Adjust ignition electrodes. Re-polarise the transformer.
Poor earth connection.	Ensure adequate earth connection.
Phase and neutral swapped around.	Check wiring diagram and change accordingly.

172 615 06-1

Cause of fault	Action
Burner trips during pre-aeration:	
Air sensor faulty or incorrectly set.	Increase/decrease air setting. Reduce air volume.
Ignition load incorrectly set.	Increase/decrease gas supply Reduce airflow.
Gas pressure too low.	Increase pressure. If necessary, contact gas supplier.

Pulsations at start-up:	
Ignition electrodes incorrectly set.	Adjust .
Gas pressure too high.	Check and adjust using pressure gauge and pressure control valve.
Flue gas side blocked.	Check the chimney flue.

Burner pulsates during operation:	
Burner incorrectly set.	Adjust.
Burner dirty.	Clean the burner.
Incorrect chimney.	Check and modify dimensions if necessary.

Burner functioning properly but with occasional blockage:	
Ionisation current too low.	Check. Must be at least 6µA, but should ideally lie between 8-20µA.
UV cell incorrectly positioned.	Adjust.
Voltage drop at certain times.	Must not drop below 15% of rated voltage. Contact an electrician if necessary.
Incorrectly set or faulty air sensor.	Check the settings and reset, or replace.
Ignition electrode overload.	Replace.
Burner control ambient temperature too high.	Insulate for heat, Max. 60 °C.
Ignition spark too weak.	Check the transformer.

Poor combustion:	
Poor draught conditions.	Check the chimney.
Flue gas temperature too high.	Boiler overloaded Decrease the gas volume, sweep the chimney if necessary.
CO2 content too low.	Choke the air supply. Check the boiler for any leakages. Choke the draught if too high.

CO content too high:	
Surplus air when using natural gas and liquefied petroleum (propane, butane).	Choke the air supply.
Poor air supply.	Open the air supply. Check flue gas damper.
Holes in gas nozzle clogged.	Clean.
Poor fresh air intake.	Check and increase.
Flame at incorrect angle due to combustion head out of position.	Check the combustion head and readjust.

Condensation build up in boiler and chimney:	
Flue gas temperature too low or gas volume too low.	Raise the flue gas temperature by increasing gas volume Insulate the chimney.

11. Service- and inspection protocol

Installation:	Boiler:	
Name:	Type:	Efficiency kW:
Address:	Burner	
	Type:	Efficiency kW:
Installed by:	Date:	

Date Measure-ment	Nm^3 gas/h	Governor		CO_2	CO	Fluegas temp	Ionisation current	Pressure		Efficiency
		Before	After	%	%	°C	µ A	Fire room mbar	Chimney mbar	%
	Small Flame									
	Large Flame									
	Measures									

Date Measure-ment	Nm^3 gas/h	Governor		CO_2	CO	Fluegas temp	Ionisation current	Pressure		Efficiency
		Before	After	%	%	°C	µ A	Fire room mbar	Chimney mbar	%
	Small Flame									
	Large Flame									
	Measures									

Date Measure-ment	Nm^3 gas/h	Governor		CO_2	CO	Fluegas temp	Ionisation current	Pressure		Efficiency
		Before	After	%	%	°C	µ A	Fire room mbar	Chimney mbar	%
	Small Flame									
	Large Flame									
	Measures									

EU Declaration of conformity

Bentone Gas Burners

Type:	Certificate No.	Type:	Certificate No.
BFG 1	**CE-0123CT1269**	**BG 550**	**CE-0123CT1326**
STG 120	**CE-0123CT1270**	**BG 650**	**CE-0123CT1348**
STG 146	**CE-0123CT1281**	**BG 700**	**CE-0123CT1359**
BG 300	**CE-0123CT1292**	**BG 800**	**CE-0123CT1360**
BG 400	**CE-0123CT1304**	**BG 950**	**CE-0123CT1371**
BG 450	**CE-0123CT1315**		

This declaration of conformity is issued under the sole responsibility of the manufacturer.
The object of the declaration described above is in conformity with:

- **Gas Appliance Regulation 2016/426/EU**
- **Machinery Directive 2006/42/EC**
- **LVD 2014/35/EU**
- **EMC 2014/30/EU**
- **The Restriction of the Use of Certain Hazardous Substances (RoHS) Directive 2011/65/EU**

References to the relevant harmonised standards used or references to the other technical specifications in relation to which conformity is declared:

EN 676:2020	Excluding the requirements of Annex K. Automatic forced draught burners for gaseous fuels.

Additional information can be downloaded at: www.bentone.com

Manufacturer: CTC AB
Näsvägen 8
SE-341 34 LJUNGBY
Sweden

Notified Body: TUV SÜD Product Service GmbH
Ridlerstaße 65
D-80339 München, Germany

Notified Body Number: 0123

Ljungby, 2024-01-01

Joachim Hultqvist
Technical Manager
CTC AB

Ola Karlsson
Quality Manager
CTC AB

Bentone®

UK Declaration of conformity

Bentone Gas Burners

Type:

BFG 1	**BG 300**	**BG 550**	**BG 800**
STG 120	**BG 400**	**BG 650**	**BG 950**
STG 146	**BG 450**	**BG 700**	

This declaration of conformity is issued under the sole responsibility of the manufacturer.
The object of the declaration described above is in conformity with:

- **Gas Appliances (Enforcement) and Miscellaneous Amendment Regulations 2018**
- **Supply of Machinery (Safety) Regulations 2008**
- **Electrical Equipment (Safety) Regulations 2016**
- **Electromagnetic Compatibility Regulations 2016**
- **The Restriction of the Use of Certain Hazardous Substances in Electrical and Electronic Equipment Regulations 2012**

References to the relevant harmonised standards used or references to the other technical specifications in relation to which conformity is declared:

BS EN 676:2020	Excluding the requirements of Annex K. Automatic forced draught burners for gaseous fuels.

Additional information can be downloaded at: www.bentone.com

Manufacturer: CTC AB
Näsvägen 8
SE-341 34 LJUNGBY
Sweden

Approved Body: TUV SÜD BABT Unlimited
Octagon House,
Concorde Way, Segensworth North,
Fareham, Hampshire,
PO 15 5RL, United Kingdom

Approved Body Number: 0168

Ljungby, 2024-01-01

Joachim Hultqvist

Technical Manager
CTC AB

Ola Karlsson

Quality Manager
CTC AB



CTC AB Box 309 SE-341 26 Ljungby
info@bentone.se +46 372 88 000
www.bentone.se